1417-6A

6 Watts, 28 Volts, Class C
Microwave 1400 - 1700 MHz

GENERAL DESCRIPTION

The 1417-6A is an internally matched, COMMON BASE transistor capable of providing 6 watts of CW RF Output power across the 1400-1700 MHz band. This transistor is specifically designed for telemetry and telecommunications applications. It utilizes gold metalization and diffused ballasting to provide high reliability and superior ruggedness.

CASE OUTLINE
55LV, STYLE 1

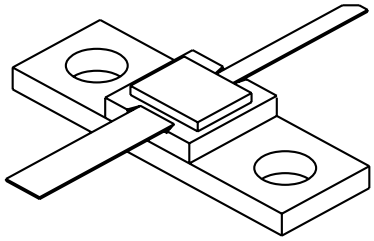

ABSOLUTE MAXIMUM RATINGS

Maximum Power Dissipation @ 25ºC 19 Watts

Maximum Voltage and Current

BVces	Collector to Emitter Voltage	50 Volts
BVebo	Emitter to Base Voltage	3.5 Volts
Ic	Collector Current	1.0 Amps

Maximum Temperatures

Storage Temperature	- 65 to + 200ºC
Operating Junction Temperature	+ 200ºC

ELECTRICAL CHARACTERISTICS @ 25 ^{O}C

SYMBOL	CHARACTERISTICS	TEST CONDITIONS	MIN	TYP	MAX	UNITS
Pout	Power Output	F = 1.4 - 1.7 GHz	6.0			Watt
Pin	Power Input	Vcc = 28 Volts			1.14	
Pg	Power Gain		7.2	7.5		dB
ηc	Collector Efficiency			40		%
VSWR1	Load Mismatch Tolerance				10:1	

BVebo	Emitter to Base Breakdown	Ie = 3.0 mA	3.5			Volts
BVces	Collector to Emitter Breakdown	Ic = 25mA	55			Volts
Icbo	Collector Leakage Current	Vcb = 28 V		1.0		mA
Cob	Output Capacitance	Vcb= 28V, F=1 MHz		6.5		pF
Hfe	DC - Current Gain	Ic = 100 mA, Vce = 5V	20		100	
θjc	Thermal Resistance	TC = 25ºC			9.0	ºC/W

Initial Issue June, 1994

GHz Technology Inc. 3000 Oakmead Village Drive, Santa Clara, CA 95051-0808 Tel. 408 / 986-8031 Fax 408 / 986-8120

CHz TECHNOLOGY
RF-MICROWAVE SILICON POWER TRANSISTORS

1417-6A

POWER OUTPUT VS FREQUENCY

Vcc=28V

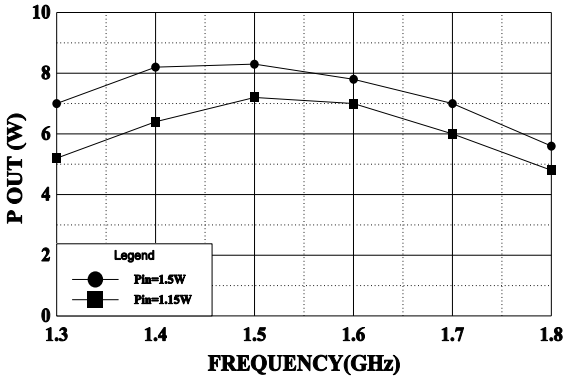

INPUT IMPEDANCE

Vcc = 28 V, Pin = 1.5 W

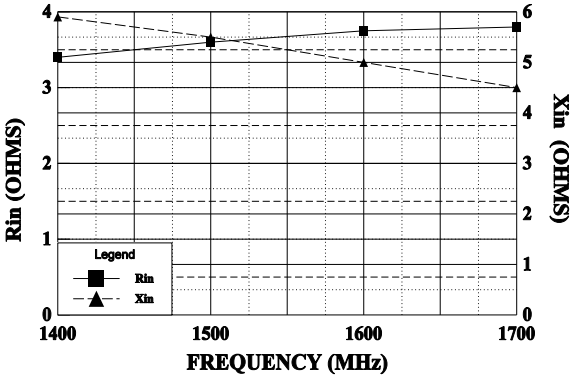

LOAD IMPEDANCE

Vcc = 28 V, Pin = 1.5 W

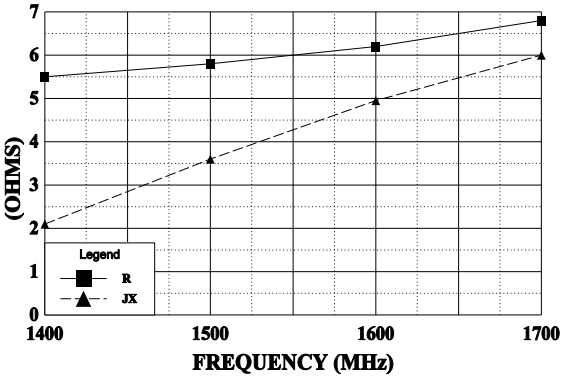

REVISIONS				
ZONE	REV	DESCRIPTION	DATE	APPROVED

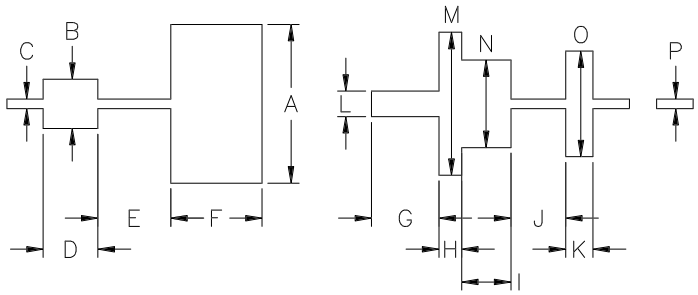

DIM	INCHES
A	.870
B	.270
C	.053
D	.300
E	.400
F	.500
G	.370
H	.125
I	.270
J	.300
K	.150
L	.140
M	.785
N	.480
O	.580
P	.053

1417-6A TEST CIRCUIT

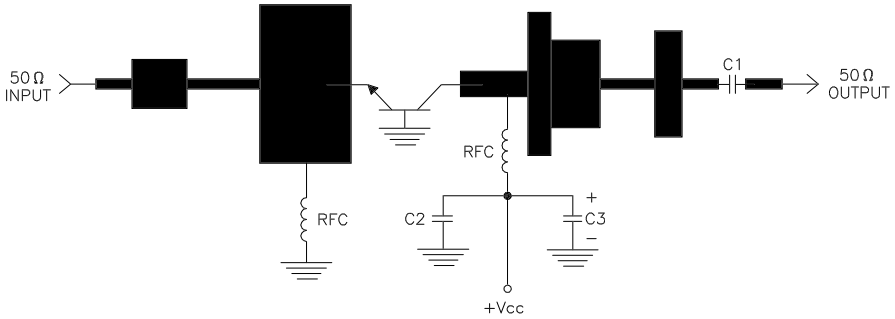

DIELECTRIC = 19.4 MIL THICK
TFE, Er=2.43
C1, C2 = 62pF CHIP ATC "A"
C3 = 10MFD @ 35V
RFC = 4 turns #22 wire 1/16" I.D.

GHz TECHNOLOGY	CAGE	DWG NO.	REV
	0PJR2	1417-6A	A
		SCALE 1/1	SHEET