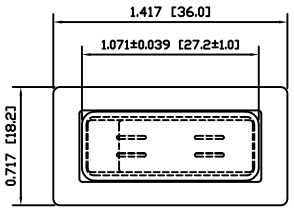

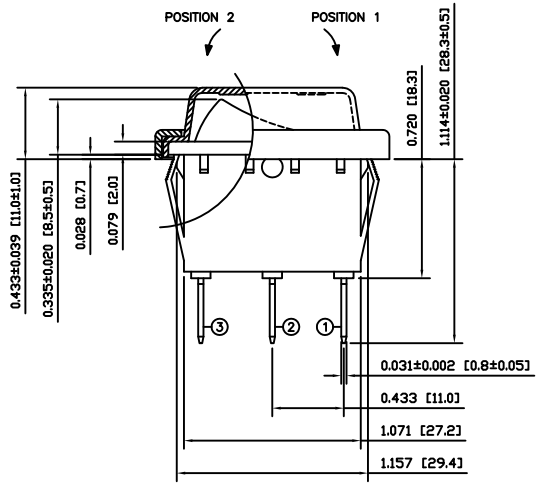

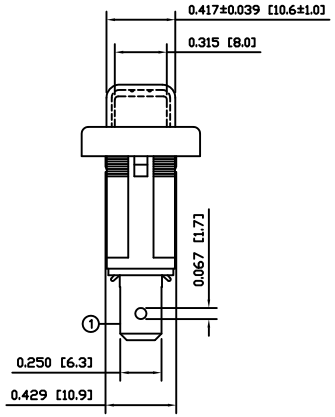

SCHEMATIC

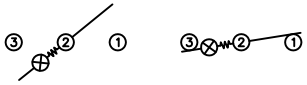

POSITION 1 (MAINTAINED) POSITION 2 (MAINTAINED)

SPECIFICATIONS

FUNCTION:
1P1T OFF–ON

RATINGS:
ANSI/UL 1054 and CAN/CSA C22.2 No. 55 (E194579):
20A 125VAC [cURus]
16A 250VAC [cURus]
3/4HP 125/250VAC [cURus]

ANSI/UL 1054 (233821):
16A 250VAC [CSAus]
3/4HP 125/250VAC [CSAus]

EN 61058–1:2002 and DIN/VDE 0630:2003–03 (40017926):
16(4)A 250V~ 1E4 μ T85/55 [ENEC10, VDE]
10(2)A 250V~ 5E4 μ T85/55 [ENEC10, VDE]
20(8)A 250V~ 1E4 μ T125/55 [ENEC10, VDE]

ILLUMINATION VOLTAGE:
125V

CONTACT RESISTANCE:
Initial: 20mΩ Max.

INSULATION RESISTANCE:
100MΩ Min. at 500VDC

DIELECTRIC STRENGTH:
1,000VAC for 1 Minute

ELECTRICAL LIFE:
6,000 Cycles [cURus, CSAus]
10,000 Cycles [ENEC10, VDE: 16(4)A 250V~]
50,000 Cycles [ENEC10, VDE: 10(2)A 250V~]

TEMPERATURE:
Operating: –20°C to 65°C [cURus, CSAus]
Operating: –20°C to 125°C [ENEC10, VDE]
Operating: –20°C to 85°C [ENEC10, VDE]

APPROVALS:

RoHS COMPLIANT

COLORS AND MARKINGS

BODY:
Black

ACTUATOR:
Transparent Green

MARKINGS:
None

MARKING COLOR:
None

FRAME:
Black

MATERIALS

BODY:
Polyamide 6/6 (PA66), UL94 V–2

ACTUATOR:
Polycarbonate (PC), UL94 V–2

LAMP CARRIER:
Polyamide 6/6 (PA66), UL94 V–2

LAMP:
Neon Bulb

LAMP SPRING:
Steel

SPRING:
Steel

CONTACTS:
Silver Plated Copper

TERMINALS:
Silver Plated Copper
Silver Plated Brass

CAP:
Polyvinyl Chloride (PVC)

FRAME:
Polyamide 6/6 (PA66), UL94 V–2

SUGGESTED PANEL CUTOUT

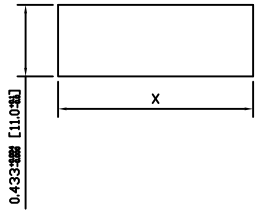

PANEL THICKNESS	X
0.030~0.049 [0.75~1.25]	1.189 [30.2]
0.049~0.079 [1.25~2.00]	1.201 [30.5]

REFERANCE	REV.	DATE	BY
ACTUATOR	A	09/07/08	CAB
BODY	A	09/07/08	CAB
COLORS	A	10/02/19	CAB
MATERIALS	A	09/12/09	CAB
SPECIFICATIONS	A	09/08/26	CAB

THE INFORMATION CONTAINED IN THIS DOCUMENT IS PROPRIETARY TO E–SWITCH AND IS NOT TO BE COPIED OR TRANSFERRED

REV.	DESCRIPTION	PCR	DATE	DRAWN BY
A	INITIAL RELEASE	18892	10/02/19	CAB

DIMENSIONS: INCHES [MILLIMETERS]
GENERAL TOLERANCES: ±0.008 [±0.2] / ±1°
SCALE: DRAWING NOT TO SCALE
PROJECTION

E•SWITCH® LAMB INDUSTRIES

TITLE: RB141D1000–136/ACC–F01–1

ITEM NUMBER: 14–RB1S00035
DATE: FEBRUARY 19, 2010
REVISION: A