Rev	AWO #	Description	Date	Appr
-	7788	RELEASED	5/7/07	

APPROVED: _____

DATE: _____ TITLE: _____

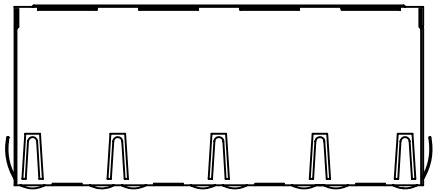

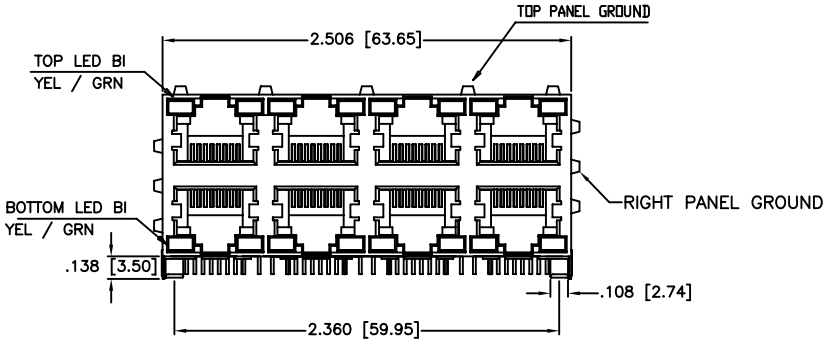

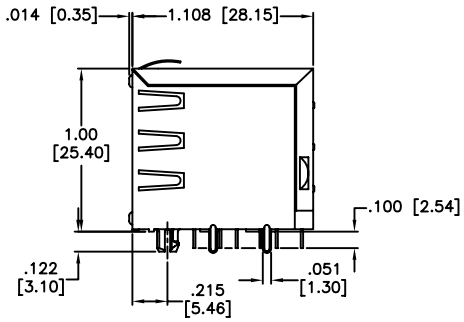

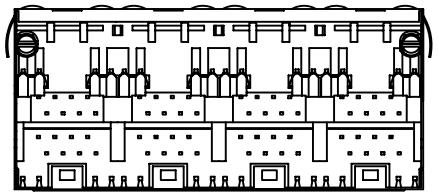

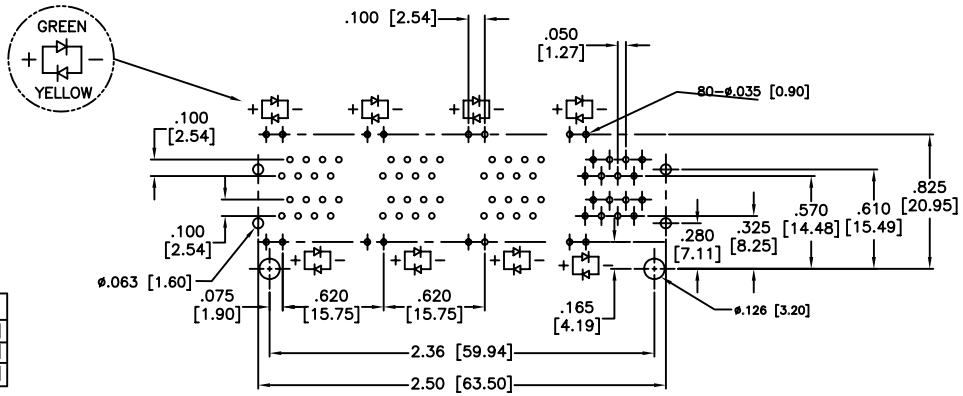

P.C.B. LAYOUT

SPECIFICATIONS:

Material:
Insulator: Nylon 46, rated UL 94V-0
Insulator color: Black
Contacts: Phosphor Bronze
Shield: Copper Alloy, Tin plated

Plating:
X plating over Nickel underplate on contact area, Tin over Copper underplate on solder tails

Electrical:
Operating voltage: 150 VAC max
Current rating: 1.5 Amps max
Insulation resistance: 500 Mohms min @ 500 VDC
Dielectric withstanding voltage: 1000 VAC for 1 minute

Temperature Rating:
Operating temperature: -40°C to +125°C

Environmental:
Lead free, RoHS Compliant
Recomended soldering temp: 235°C for 5 seconds

RoHS COMPLIANT

"X"	PLATING
0	15 uin Gold
1	30 uin Gold
2	50 uin Gold

UNLESS OTHERWISE SPECIFIED
ALL DIMENSIONS ARE MM [INCHES]
TOLERANCES: EXCEPT AS NOTED

INCHES		HOLES	
.X	± .10	Ø.X	±.10
.XX	± .020	Ø.XX	±.015
.XXX	± .015	Ø.XXX	±.010

APPROVALS		DATE
DRAWN	BW	5/7/07
CHECKED		
APPROVED		

ADAM TECH
909 Rahway Avenue, Union, NJ 07083
Phone: 908-687-5000 Fax: 908-687-5710

TITLE
MODULAR JACK GANGED, 8 PORT, 8P8C
BI DIRECTIONAL LED YELLOW / GREEN

SIZE	PART NO.	REV.
X	MTJG-8-88JX1-FSG-PG-LQ	-

REF: | SCALE: NTS | SHEET 1 OF 1