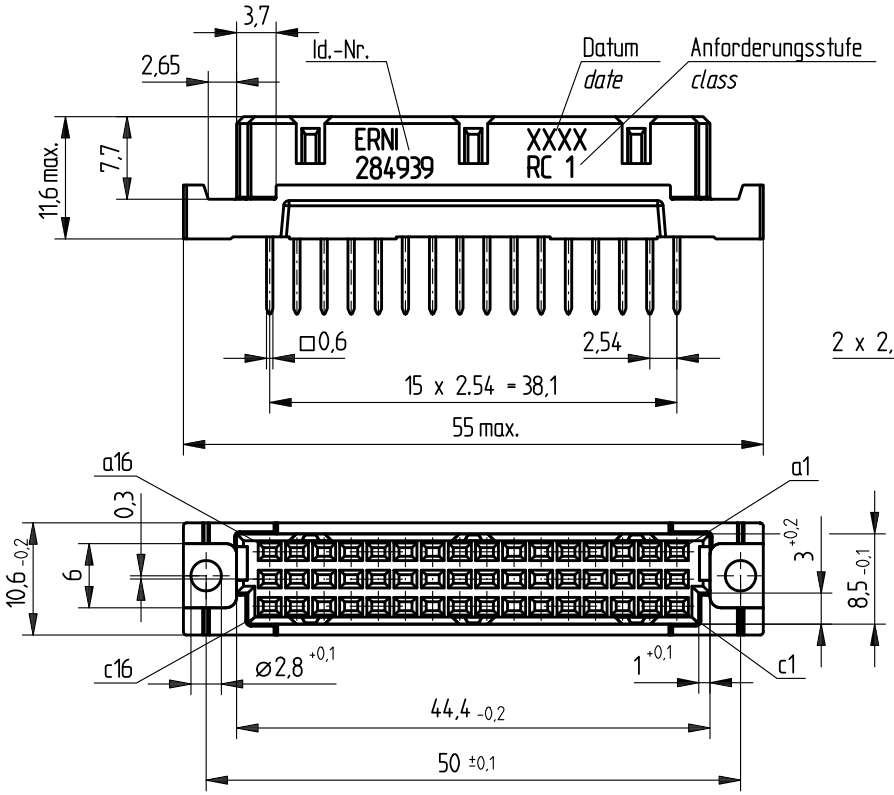

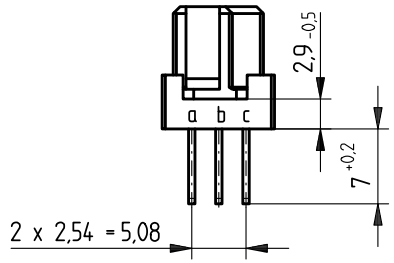

Bestückungsplan / *contact layout*

■ bestückt / *assemble*

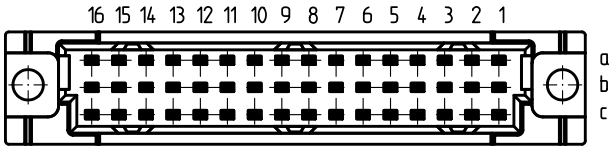

Leiterplatten-Lochbild / *PCB drillhole pattern*

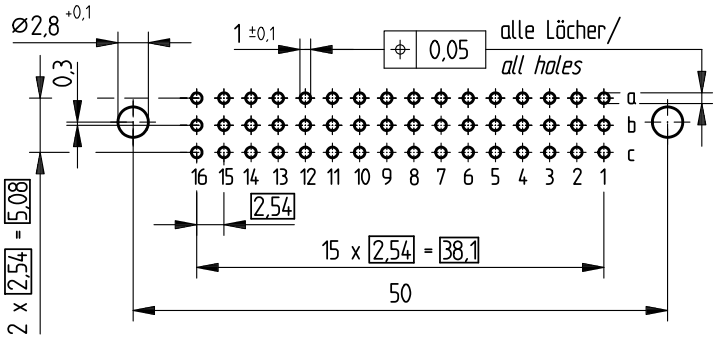

Anschluß 0,6 x 0,6 mm / *terminal 0,6 x 0,6 mm*

Isolierwerkstoff / *housing material :* PBT GF30

Bauart 7 / *type 7*

Anforderungsstufe 1 = 500 Steckzyklen / *performance class 1 = 500 mating cycles*

Fehlende Maße und Angaben nach IEC 60 603-2 / DIN EN 60 603-2

Missing information and dimensions per IEC 60 603-2

Consider protection memo from DIN 34

Information:	Tolerances — All Dimensions in mm	Scale 2:1	
All rights reserved. Only for information. To insure that this is the latest version of this drawing, please contact one of the ERNI companies before using.	Subject to modification without prior notice. Drawing will not be updated.	Designation: Federleiste C/2, 48 / *Fem. Connector C/2, 48*	
	ERNI www.ERNI.com	284939	1
Index	Date	H:00064151.SZA	STVC/2