Rev	AWO #	Description	Date	Appr
-		RELEASED	10/06/10	

APPROVED: _____

DATE: _____ TITLE: _____

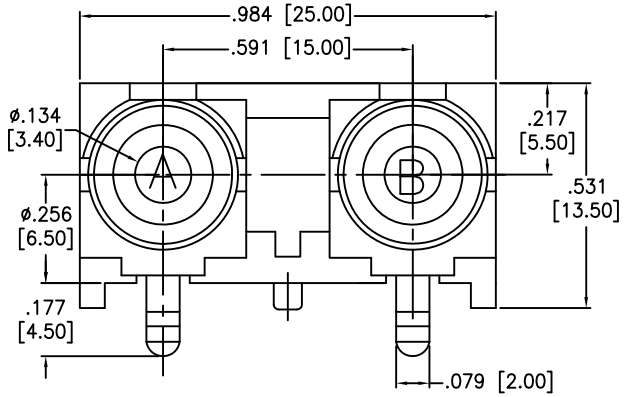

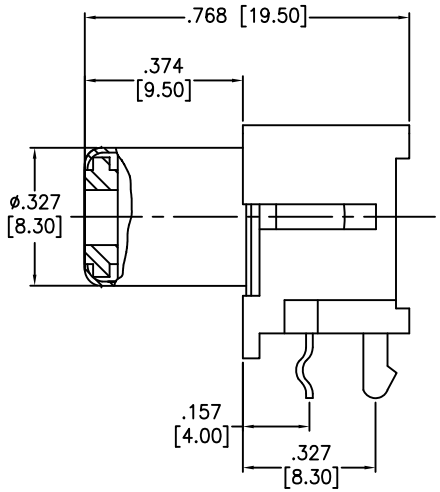

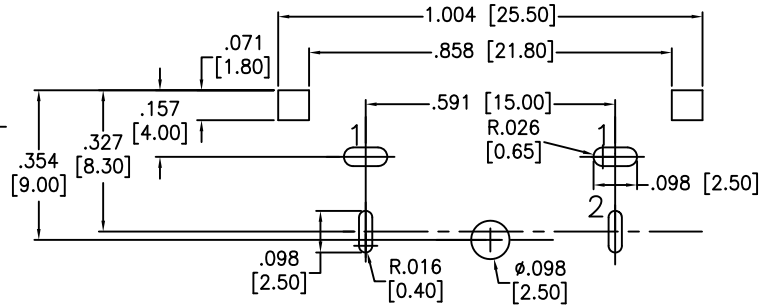

RECOMMENDED PCB LAYOUT
(Bottom View)

SCHEMATIC

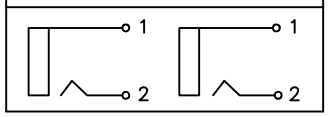

ADAM P/N	A	B
RCA-28-1-R/W	RED	WHITE

SPECIFICATIONS:
Material:
Housing: PBT, color Black
Ring: PBT, color Red, White
Terminal: Brass, Tin plated
Electrical:
Operation voltage: 30V DC max.
Current rating: 1 Amp max
Contact resistance: 30 mohms max.
Insulation resistance: 100 Mohms min
Dielectric withstanding voltage: 500 VAC for 1 minute
Temperature rating:
Operating temperature: −25°C to +80°C
Environmental:
Lead free, RoHS compliant.
Recommended soldering temp: 235°C for 5 sec.
Packaging:
Anti−ESD plastic bags

RoHS COMPLIANT

JACKS A AND B CAN BE ANY COMBINATION OF AVAILABLE COLORS

UNLESS OTHERWISE SPECIFIED
ALL DIMENSIONS ARE INCHES [MM]
TOLERANCES: EXCEPT AS NOTED

INCHES		HOLES	
.X	± .10	Ø.X	±.10
.XX	± .020	Ø.XX	±.015
.XXX	± .015	Ø.XXX	±.010

APPROVALS		DATE
DRAWN	DY	10/06/10
CHECKED		
APPROVED		

ADAM TECH
909 Rahway Avenue, Union, NJ 07083
Phone: 908-687-5000 Fax: 908-687-5710

TITLE
RCA JACK, 2 PORTS, GANGED

SIZE	PART NO.	REV.
X	RCA-28-1-R/W	-

REF: S00030C | SCALE: NTS | SHEET 1 OF 1