LinkCom Manufacturing Co., Ltd

Model NO.	LCCE-052■132	Model Name	Power Supply
Part NO.	PLCCE0052■132	SIZE	163 * 47 * 31.6 mm【6.42 * 1.85 * 1.24 inch】

FEATURES

- ◆ AC Input 90~305Vac
- ◆ Protection: SCP / OTP / OVP
- ◆ High Operating ambient Temp: -20℃ ~ +60℃
- ◆ Power Factor: >0.95@115VAC >0.9@230VAC
- ◆ Safety: UL
- ◆ EMC: CE / FCC
- ◆ Comply with Indoor/Outdoor Waterproof (IP 67)
- ◆ Dimension (L*W*H): 163 * 47 * 31.6 mm
- ◆ Dimension (L*W*H): 6.42 * 1.85 * 1.24 inch
- ◆ ROHS Compliant

Module : LCCE-052■132 ***,# =SEE NOTES BELOW**

*(8)	MODEL / SPECIFICATION	LCCE-052■132		
		min.	norm.	max.
	DC OUTPUT VOLTAGE (V)		42	
*	PRESET ACCURACY (%) *(7)		5	
*	OUTPUT CURRENT(A) *(5)		1.25	
*	O/P NOISE (P-P, V) *(3)			4.5
*	LINE REGULATION (%) *(6)		10	
	DC OUTPUT POWER	52.5 W		
	EFFICIENCY(typ @Full Load)	87%		
	TURN ON DELAY TIME	3000ms at full load 115VAC/230VAC		
	INPUT VOLTAGE RANGE	90-305VAC, 127-431VDC, Normal：100-277VAC		
	INPUT FREQUENCY	Range:47-63Hz, Normal：50-60Hz		
	INRUSH CURRENT (typ)	COLD START 43A @ 230VAC		
	AC CURRENT	0.7A/100VAC		
	LEAKAGE CURRENT	0.75mA/264VAC		
	SHORT CIRCUIT PROTECTION	The SCP, OTP and OVP will restart automaticalty after the fault condition is removed.		
	OVER TEMP. PROTECTION			
	OVER V, PROTECTION			
*	OPERATING TEMP.*(4)	-20 to +60℃@full load		
	STORAGE TEMPERATURE	-40 to +80℃		
	RELATIVE HUMIDITY	10 to +90%		
	TEMP. COEFFICIENT	0.03% / ℃ (0-50℃, typ)		
	SAFETY	UL 60950-1		
	EMI	CE EN55015 / FCC Part15		
	DIMENSIONS(L*W*H)	163 * 47 * 31.6 mm【6.42 * 1.85 * 1.24 inch】		

NOTES：(1)All parameters not specially mentioned are measured 230VAC input.
(2)All specifications Typical @25℃, unless otherwise noted, at normal line and load.
(3)Ripple and Noise measured directly at pins/terminals at nom. load, @20MHz bandwidth.
(4)Specified for free-air convection cooling.
(5)Minimum load is NOT required for proper operation .
(6)Line regulation measured from 100VAC to 277VAC.
(7)Preset accuracy measured at normal load, 120VAC input.
(8)100% Production Tested.

※Reference www.linkcom.com.tw For more information, please contact with: sales@linkcom.com.tw

Model NO.	LCCE-052■132	Model Name	Power Supply
Part NO.	PLCCE0052■132	SIZE	163 * 47 * 31.6 mm【6.42 * 1.85 * 1.24 inch】

Dimensions

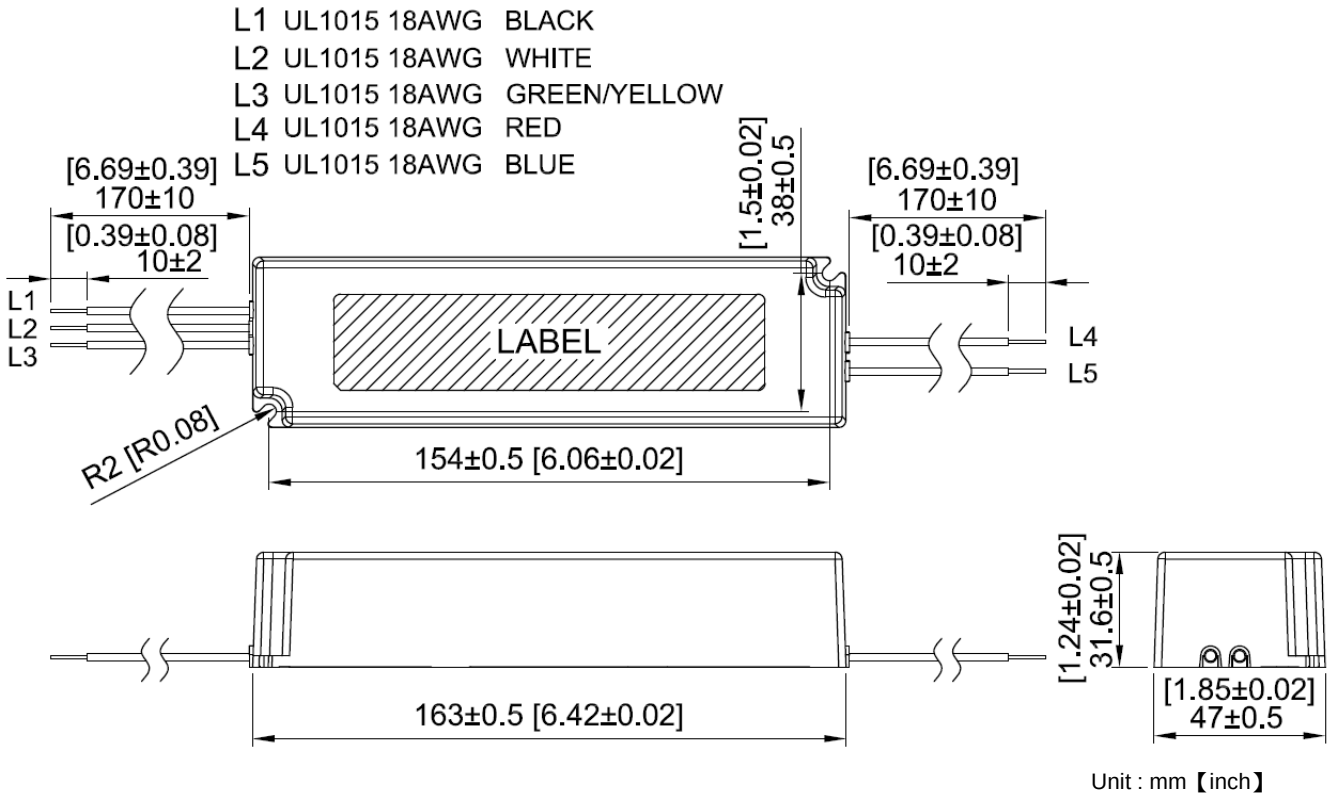

Unit : mm【inch】

※Reference