Firmtech [FB80xED_sensor]V1.2

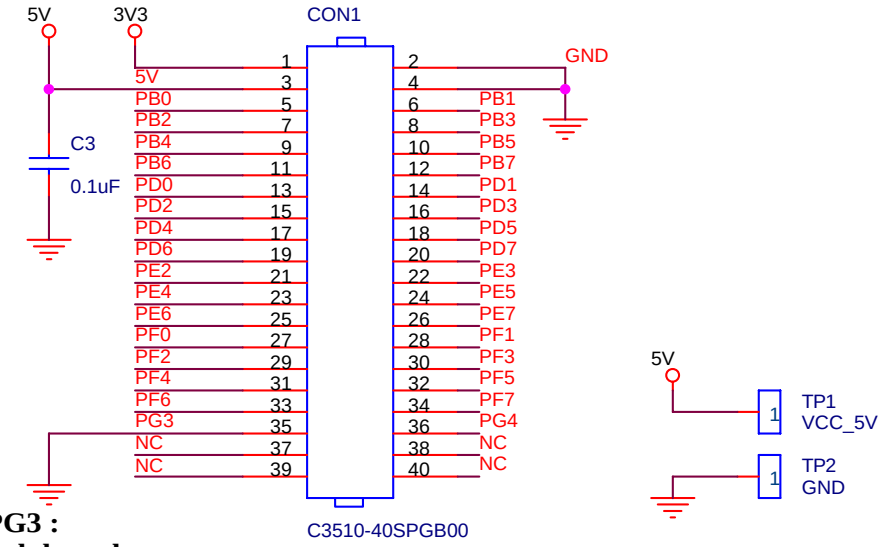

PG3 : Sub board sensing port

FB800_FB801ED Interface Connector

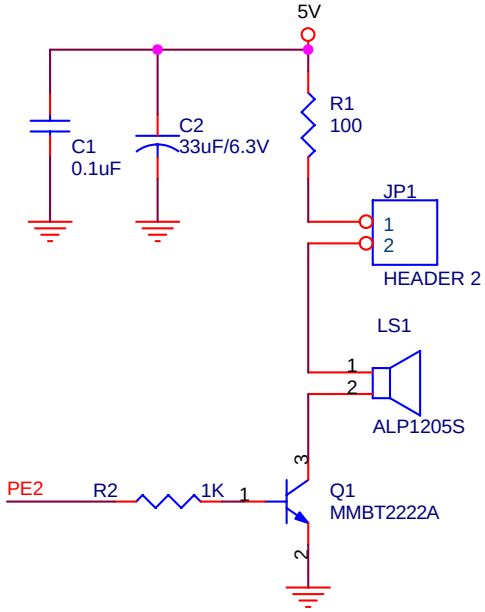

Buzzer Part

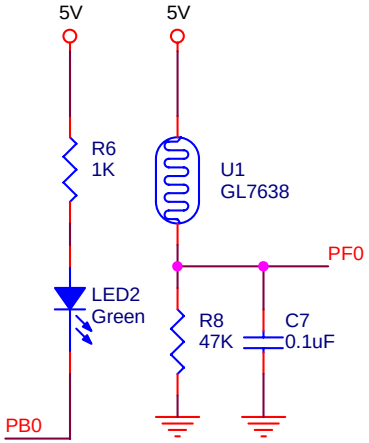

Cds Photoconductive cell part

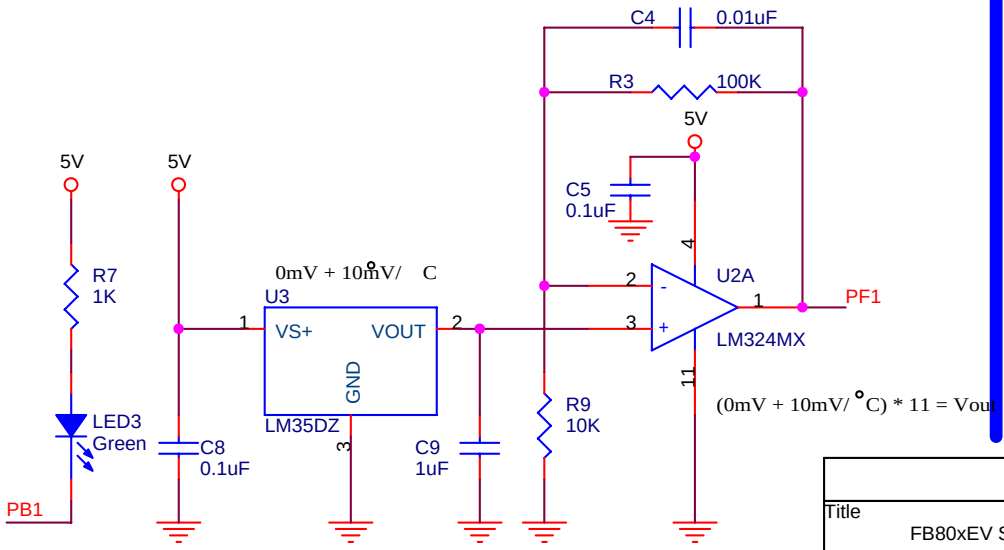

Temperature sense part

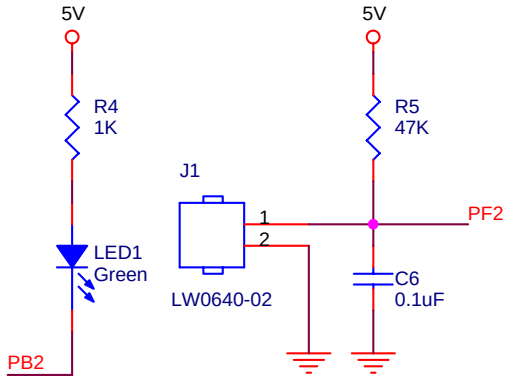

Magnetic switch part

Firmtech co., Ltd		
Title: FB80xEV Sensor Sub Board		
Size: A	Document Number: FB80xEV_sensor V1_0	Rev: 1.0
Date: Friday, August 14, 2009	Sheet 1 of 1	