NUMBER 520415

METRIC

13rd ANGLE PROJECTION

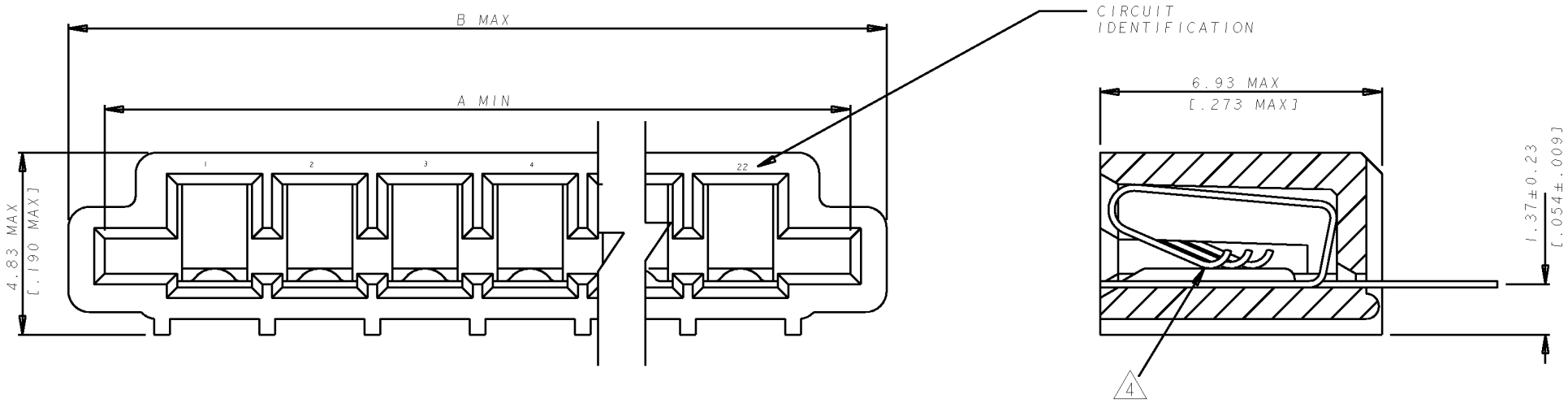

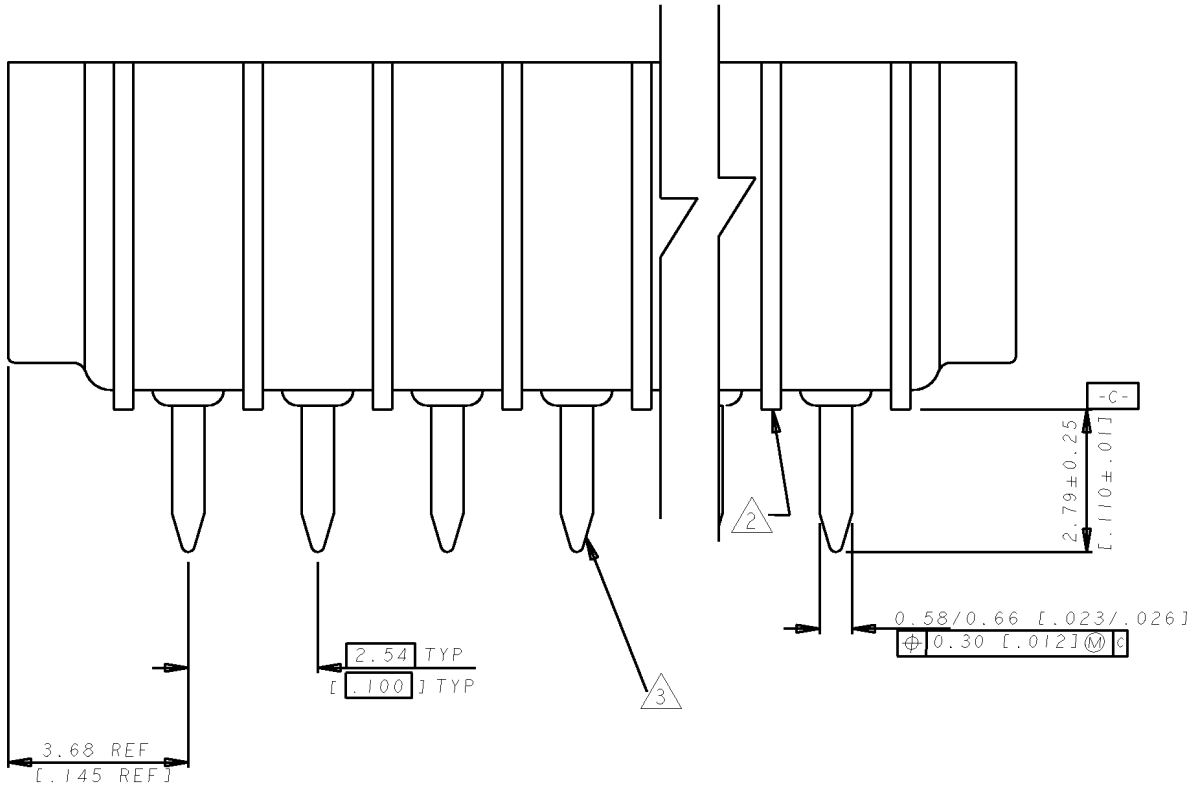

NOTES

1. CONNECTOR WILL ACCEPT FLEXIBLE PRINTED CIRCUIT OR FLAT FLEXIBLE CABLE ON 2.54 [.100] CENTERS IN A THICKNESS RANGE OF 0.127 TO 0.381 [.005 TO .015] IN CONTACT AREA
2. STAND-OFFS PREVENT SOLVENT ENTRAPMENT
3. CONTACTS BRIGHT TIN PLATED
4. SEQUENTIAL CONTACTS REDUCE CABLE INSERTION FORCE
5. ACCEPTS CABLE OR CIRCUITRY WITH EXPOSED CONDUCTORS FACING TOWARD OR AWAY FROM THE BOARD SURFACE
6. REFER TO APPLICATION SPEC 114-2062
7. MATERIAL
   HOUSING : GLASS REINFORCED POLYESTER THERMOPLASTIC UL 94 V0 RATED, BLACK
   CONTACT : PHOS BRONZE WITH MATTE TIN FINISH

LEAD FREE				OBSOLETE
7-520415-2	60.78 [2.393]	58.57 [2.306]	22	2-520415-2
7-520415-1	58.24 [2.293]	56.03 [2.206]	21	2-520415-1
7-520415-0	55.70 [2.193]	53.49 [2.106]	20	2-520415-0
6-520415-9	53.16 [2.093]	50.95 [2.006]	19	1-520415-9
6-520415-8	50.62 [1.993]	48.41 [1.906]	18	1-520415-8
6-520415-7	48.08 [1.893]	45.87 [1.806]	17	1-520415-7
6-520415-6	45.54 [1.793]	43.33 [1.706]	16	1-520415-6
6-520415-5	43.00 [1.693]	40.79 [1.606]	15	1-520415-5
6-520415-4	40.46 [1.593]	38.25 [1.506]	14	1-520415-4
6-520415-3	37.92 [1.493]	35.71 [1.406]	13	1-520415-3
6-520415-2	35.38 [1.393]	33.17 [1.306]	12	1-520415-2
6-520415-1	32.84 [1.293]	30.63 [1.206]	11	1-520415-1
6-520415-0	30.30 [1.193]	28.09 [1.106]	10	1-520415-0
5-520415-9	27.76 [1.093]	25.55 [1.006]	9	520415-9
5-520415-8	25.22 [.993]	23.01 [.906]	8	520415-8
5-520415-7	22.68 [.893]	20.47 [.806]	7	520415-7
5-520415-6	20.14 [.793]	17.93 [.706]	6	520415-6
5-520415-5	17.60 [.693]	15.39 [.606]	5	520415-5
5-520415-4	15.06 [.593]	12.85 [.506]	4	520415-4
5-520415-3	12.52 [.493]	10.31 [.406]	3	520415-3
5-520415-2	9.98 [.393]	7.77 [.306]	2	520415-2
PART NO.	B	A	POS	PART NO

LTR	(REVISION RECORD)	DR	CHK	DATE
P1	REVISED ECR-06-004332	PM	KS	21FEB06
P	REVISED FR00-0028-05	CS	PCH	1-MAR-05
N	REVISED FR00-0011-04	SD	PCH	18-FEB-04
M	REDRAWN DY/EC/	LWY	SL	9.30.93

Copyright © 1993

Copyright © 1993
AMP MFG (S) PTE LTD.
ALL RIGHTS RESERVED.

AMP

AMP MANUFACTURING (S) PRIVATE LIMITED

(MATERIAL) 7

(FINISH) CONTACTS MATTE TIN PLATED

DR. 9.30.93 WYLEE

DE. A.SOH

CHK. 9.30.93 SALLY

APP. PETER de JONG

(NAME) TRIO-MATE VERTICAL CABLE ENTRY FOR 2.36[.093] THK P.C. BOARD

(GENERAL TOLERANCE) ±0.38 [±.015]

SIZE A2 | LOC DY | (No.) 520415

(SCALE) 10:1 | REV. P1 | SHEET 1 OF 1

CUSTOMER DRAWING

DIMENSIONS IN MM [INCHES]. DO NOT SCALE PRINT

PRINT DIST

AMP-J
REV 10/83