| P/N |
|---|
| CCSF |

| REVISIONS | | | | |
|---|---|---|---|---|
| ZONE | REV. | DESCRIPTION(S) | DATE | BY |
| – | C | ECO 19559 (REDRAW) | 09.11.06 | DKN |
| | | | | |
| | | | | |

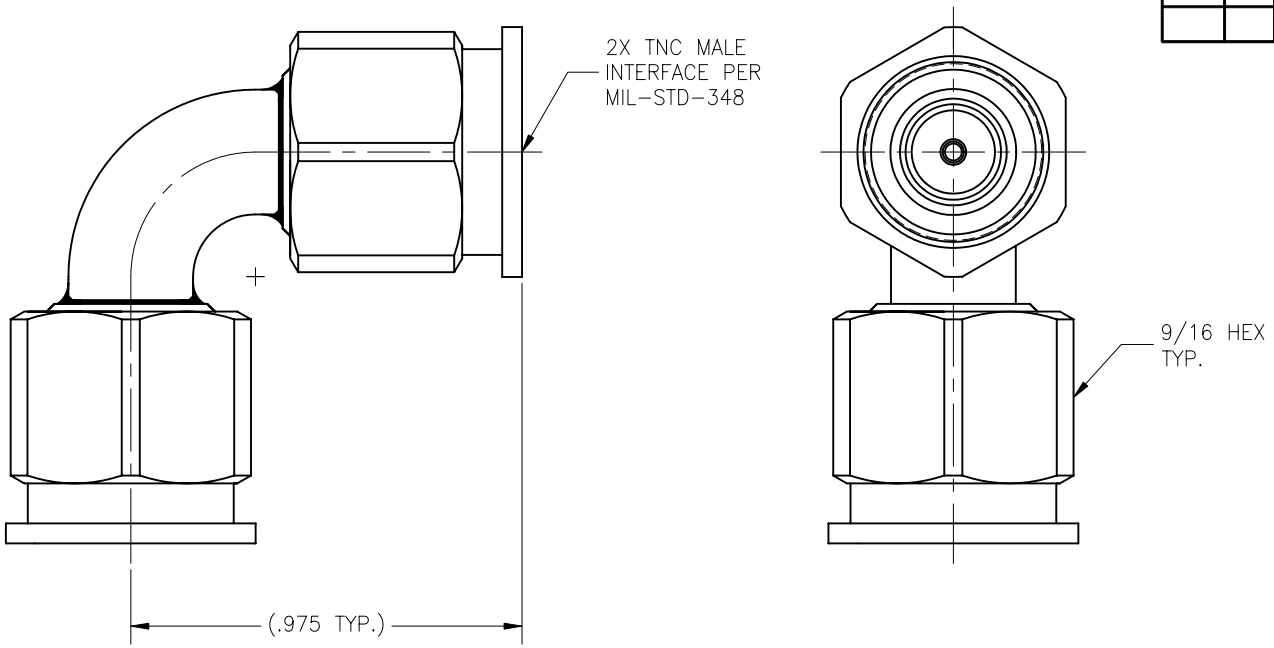


| DRAWING NO. | REV. |
|---|---|
| 9052 | C |

## MATERIAL:

R/A Body:
303 sst per ASTM A–743.
Coupling Nut, Male Body & Press Ring:
303 sst per ASTM A–582.
Center Conductor:
BeCu alloy per ASTM B–196.
Dielectric:
PTFE per ASTM D–1710.
Gasket:
Silicon Rubber per A–A–59588.

## ELECTRICAL:

Impedance: 50 Ohms nominal.
Frequency Range: DC to 18.0 GHz.
VSWR: 1.08 + .009 f(GHz).
Insertion Loss: .25 dB max to 18GHz.
Working Voltage: 500 Vrms @ Sea Level
125 Vrms @ 70,000 ft
Dielectric Withstand Voltage: 1500 Vrms
RF HiPot Withstand Voltage: 1000 Vrms
Corona Level: 375 Vrms Min.
Insulation Resistance: 5000 MegaOhms
Contact Resistance:
Center Conductor: 2.5 mOhms MAX
Outer Conductor: 2.0 mOhms MAX
Permeability: Less than 2.0 MU
RF Leakage: –90 dB min from 2–3 GHz.

## MECHANICAL:

Mating Characteristics:
Interface per Mil–Std–348.
Force To Engage & Disengage:
Torque: 2 inch–lbs max.
Center Contact Retention:
Axial Force: 6 pounds min.
Connector Durability:
500 cycles min.

## ENVIRONMENTAL:

Temperature Range: –65°C to +165°C.
Moisture Resistance:
Mil–Std–202, Method 106, Insulation resistance at least 200 MegOhms within 5 minutes after removal from humidity.
Corrosion:
Mil–Std–202, Method 101, Test Cond. B.
Vibration:
Mil–Std–202, Method 204, Test Cond. B.

Mil–Std–202, Method 213, Test cond. I.
Shock:

## FINISH:

Center Conductor:
Gold Plate per ASTM B–488, over nickel plate per AMS–QQ–N–290.
Coupling Nut, Bodies & Press Ring:
Passivated per ASTM A–967.

| APPLICABLE TENSOLITE DOCUMENTS | | |
|---|---|---|
| WORK STD | PROD INST | ASSY INST |
| NA | NA | NA |
| | | |
| | | |


NOTICE

THIS DRAWING EMBODIES A CONFIDENTIAL PROPRIETARY DESIGN ORIGINATED BY TENSOLITE COMPANY AND ALL DESIGN, MANUFACTURING REPRODUCTION, USE AND SALE RIGHTS REGARDING THE SAME ARE EXPRESSLY RESERVED. IT IS SUBMITTED UNDER A CONFIDENTIAL RELATIONSHIP FOR A SPECIFIED PURPOSE AND THE RECIPIENT AGREES BY ACCEPTING THIS DRAWING NOT TO SUPPLY OR DISCLOSE ANY INFORMATION REGARDING IT TO ANY UNAUTHORIZED PERSON TO INCORPORATE IN OTHER PROJECTS ANY SPECIAL FEATURES PECULIAR TO THIS DESIGN. ALL PATENT RIGHTS HERETO ARE EXPRESSLY RESERVED BY TENSOLITE COMPANY, LONG BEACH, CALIFORNIA 90815.


TOLERANCES AND NOTES
EXCEPT AS NOTED

DIMENSIONS ARE IN INCHES.
LINEAR .XX ±.015 .XXX ±.005 ANGULAR ± 1/2°
FRACTION ± 1/32

1. MACHINE FINISH: 63 √ RMS
2. BREAK ALL SHARP EDGES .003 MAX.
3. MACHINED FILLETS .005 MAX.
4. MACHINED SURFACES SQUARE TO RESPECTIVE AXIS WITHIN .005 INCHES PER INCH.
5. MACHINED DIAMETERS CONCENTRIC WITHIN .002 T.I.R.
6. DIMENSIONS TO BE MET BEFORE PLATING.
7. CHAMFER ALL THREADS 45°.
8. THREADS PER H–28
9. REMOVE FRAYED EDGES ON TEFLON.
10. REMOVE ALL BURRS.

| – | – | – | – |
|---|---|---|---|
| MATERIAL | SIZE | SPECIFICATION | PROCUREMENT |

NEXT ASSY

| APPROVAL INITIALS | | DATE |
|---|---|---|
| DRAWN BY | AGS | 08.29.02 |
| CHECKED | | |
| QUALITY | | |
| ENGINEERING | DKN | 09.13.06 |
| | | |

Tensolite
HIGH PERFORMANCE CABLES & INTERCONNECT SYSTEMS
Long Beach, California 90815

TITLE
TNC MALE TO TNC FEMALE
RADIUS R/A ADAPTER

| SCALE | SUB-DIRECTORY\FILENAME | SHEET |
|---|---|---|
| 4:1 | OL_\ | 1 OF 1 |

| SIZE | CAGE CODE | DRAWING NO. | REV. |
|---|---|---|---|
| C | 30990 | 9052 | C |