TITLE	SCHOTT CORPORATION	AGENCY APPROVAL:	PART NUMBER 34538
LM259X Inductor 150 µHy .45 ADC	1000 PARKERS LAKE ROAD WAYZATA, MN 55391	N/A	REV C / PAGE 1

Old Schott P/N: 67143970

ELECTRICAL CHARACTERISTICS
Specifications at room temperature (ref. 25°C)

1. INDUCTANCE: @ 10 kHz, 0.1 Vrms,
   (1 thru 3 to 4 thru 6) = 150 - 195 µH

2. DC RESISTANCE:
   (1 thru 3 to 4 thru 6) = .30 Ohms Max.

3. SRF: 1.3 MHZ Min.

4. HIPOT: 500 VDC
   WINDING TO CORE
   2 SEC., 5 mA MAX

GENERAL NOTES:

1. Current rating is the current at which the inductance is a minimum of 90% of the rated value.
2. All pins may not be used; electrical schematic is based on the standard footprint.

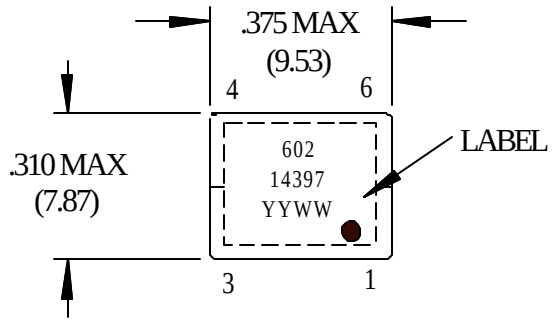

PWB LAYOUT

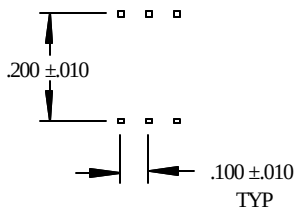

PINS: .017 Sq.
(O.43)

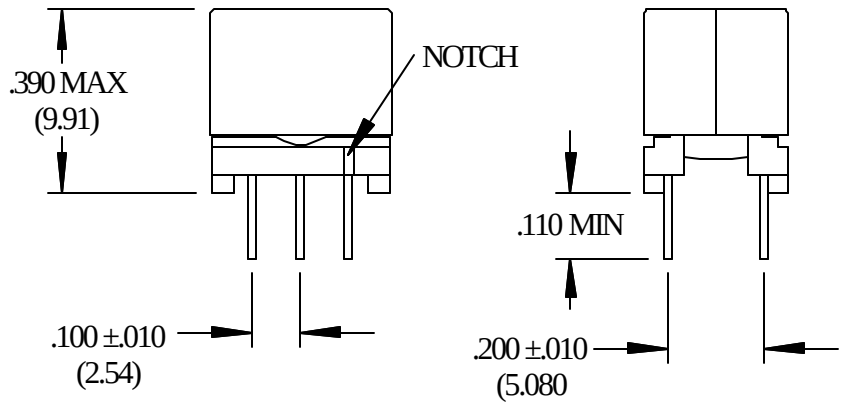

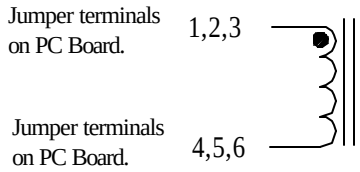

TOLERANCES UNLESS OTHERWISE NOTED	2 PLACE	3 PLACE	ANGLE
	+ .03	+ .010	+ °