P-Channel 32-V (D-S) MOSFET

These miniature surface mount MOSFETs utilize a high cell density trench process to provide low $r_{DS(on)}$ and to ensure minimal power loss and heat dissipation. Typical applications are DC-DC converters and power management in portable and battery-powered products such as computers, printers, PCMCIA cards, cellular and cordless telephones.

PRODUCT SUMMARY		
V_{DS} (V)	$r_{DS(on)}$ m(Ω)	I_D (A)
-32	59 @ V_{GS} = -10V	24
	95 @ V_{GS} = -4.5V	19

- Low $r_{DS(on)}$ provides higher efficiency and extends battery life
- Low thermal impedance copper leadframe DPAK saves board space
- Fast switching speed
- High performance trench technology

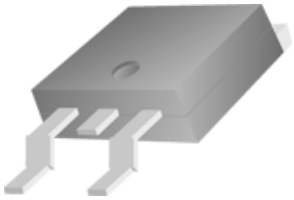

TO-252

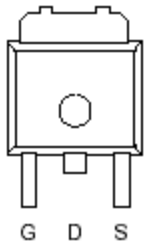

Top View

ABSOLUTE MAXIMUM RATINGS (T_A = 25 °C UNLESS OTHERWISE NOTED)				
Parameter		Symbol	Maximum	Units
Drain-Source Voltage		V_{DS}	-32	V
Gate-Source Voltage		V_{GS}	±25	
Continuous Drain Current[a]	T_A=25°C	I_D	24	A
Pulsed Drain Current[b]		I_{DM}	±40	
Continuous Source Current (Diode Conduction)[a]		I_S	-30	A
Power Dissipation[a]	T_A=25°C	P_D	50	W
Operating Junction and Storage Temperature Range		T_J, T_{stg}	-55 to 175	°C

THERMAL RESISTANCE RATINGS			
Parameter	Symbol	Maximum	Units
Maximum Junction-to-Ambient[a]	$R_{\theta JA}$	50	°C/W
Maximum Junction-to-Case	$R_{\theta JC}$	3.0	°C/W

Notes

a. Surface Mounted on 1" x 1" FR4 Board.

b. Pulse width limited by maximum junction temperature

SPECIFICATIONS (T_A = 25°C UNLESS OTHERWISE NOTED)						
Parameter	**Symbol**	**Test Conditions**	**Limits**			**Unit**
			Min	**Typ**	**Max**	
Static						
Gate-Threshold Voltage	$V_{GS(th)}$	V_{DS} = V_{GS}, I_D = -250 uA	-1			
Gate-Body Leakage	I_{GSS}	V_{DS} = 0 V, V_{GS} = ±25 V			±100	nA
Zero Gate Voltage Drain Current	I_{DSS}	V_{DS} = -24 V, V_{GS} = 0 V			-1	uA
		V_{DS} = -24 V, V_{GS} = 0 V, T_J = 55°C			-5	
On-State Drain Current[A]	$I_{D(on)}$	V_{DS} = -5 V, V_{GS} = -10 V	-41			A
Drain-Source On-Resistance[A]	$r_{DS(on)}$	V_{GS} = -10 V, I_D = -24 A			59	mΩ
		V_{GS} = -4.5 V, I_D = -19 A			95	
Forward Tranconductance[A]	g_{fs}	V_{DS} = -15 V, I_D = -24 A		31		S
Diode Forward Voltage	V_{SD}	I_S = -41 A, V_{GS} = 0 V		-0.7		V
Dynamic[b]						
Total Gate Charge	Q_g	V_{DS} = -15 V, V_{GS} = -4.5 V, I_D = -24 A		6.4		nC
Gate-Source Charge	Q_{gs}			1.9		
Gate-Drain Charge	Q_{gd}			2.5		
Input Capacitance	C_{iss}	VDS=-15V, VGS=0V, f=1MHz		520		pF
Output Capacitance	C_{oss}			130		
Reverse Transfer Capacitance	C_{rss}			70		
Switching						
Turn-On Delay Time	$t_{d(on)}$	V_{DD} = -15 V, R_L = 15 Ω , ID = -24 A, VGEN = -10 V, RG = 6Ω		10		nS
Rise Time	t_r			2.8		
Turn-Off Delay Time	$t_{d(off)}$			53.6		
Fall-Time	t_f			46		

Notes

a. Pulse test: PW <= 300us duty cycle <= 2%.

b. Guaranteed by design, not subject to production testing.

FREESCALE reserves the right to make changes without further notic e to any products herein. freescale makes no warranty, representation or guarantee regarding the suitability of its products for any particular purpose, nor does freescale assume any liability arising ou t of the application or use of any product or circuit, and specifically disclaims any and all liability, including without limitation special, consequential or incidental damages. "Typical" parameters which may be provided in freescale data sheets and/or specifications can and do vary in different applications and actual performance may vary over time. All operating parameters, including "Typicals" must be validated for each customer application by customer's technical experts. freescale does not convey any license under its patent rights nor the rights of others. freescale products are not designed, intended, or authorized for use as components in systems intended for surgical implant into the body, or other applications intended to support or sustain life, or for any other application in which the failure of the freescale product could create a situation where personal injury or death may occur. Should Buyer purchase or use freescale products for any such uninte nded or unauthorized application, Buyer shall indemnify and hold freescale and its officers, employees, subsidiaries, affiliates, and distributors harmless against all claims, costs, damages, and expenses, and reasonable attorney fees arising out of, directly or indirectly, any claim of personal injury or death associated with such unintended or unauthorized use, even if such claim alleges that freescale was negligent regarding the design or manufacture of the part. freescale is an Equal Opportunity/Affirmative Action Employer.

Package Information

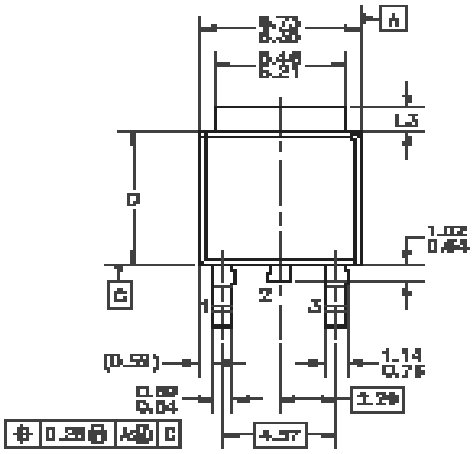

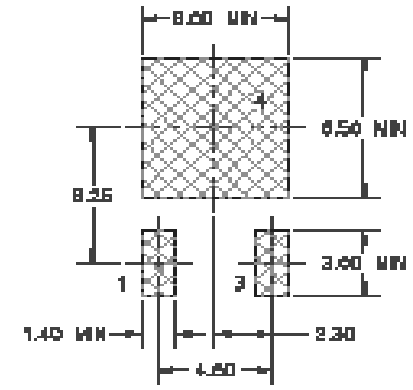

LAND PATTERN RECOMMENDATION

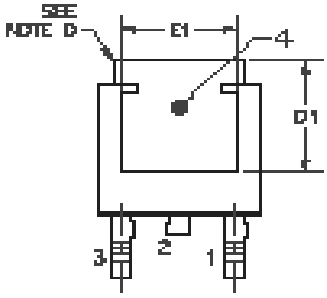

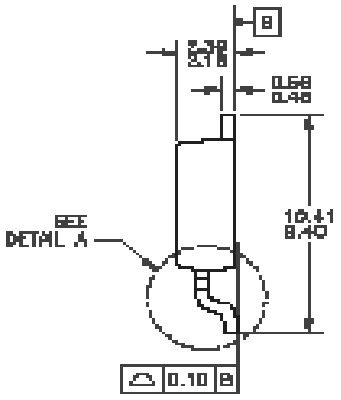

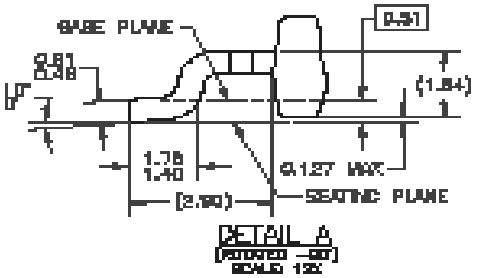

NOTES: UNLESS OTHERWISE SPECIFIED
A) ALL DIMENSIONS ARE IN MILLIMETERS.
B) THIS PACKAGE CONFORMS TO JEDEC, TO-252, ISSUE C, VARIATION AA & AB, DATED NOV. 1989.
C) DIMENSIONING AND TOLERANCING PER ASME Y14.5M-1994.
D) HEAT SINK TOP EDGE COULD BE IN CHAMFERED CORNERS OR EDGE PROTRUSION.
E) DIMENSIONS L3,D,E1&D1 TABLE:

	OPTION AA	OPTION AB
L3	0.88–1.27	1.02–2.89
D	5.97–6.83	6.33–6.69
E1	4.32 MIN	3.81 MIN
D1	3.81 MIN	4.57 MIN