DIMENSIONS mm (inches)

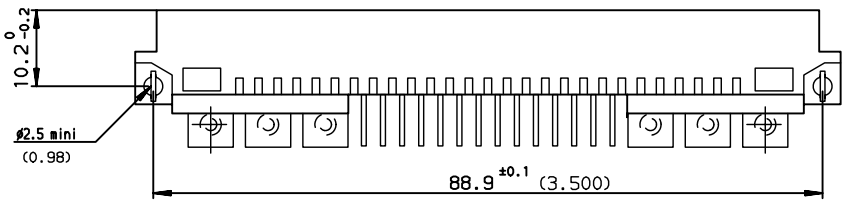

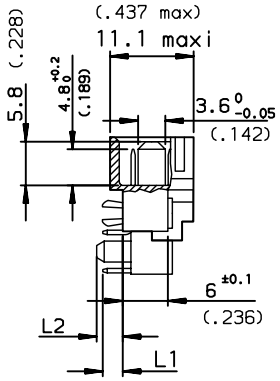

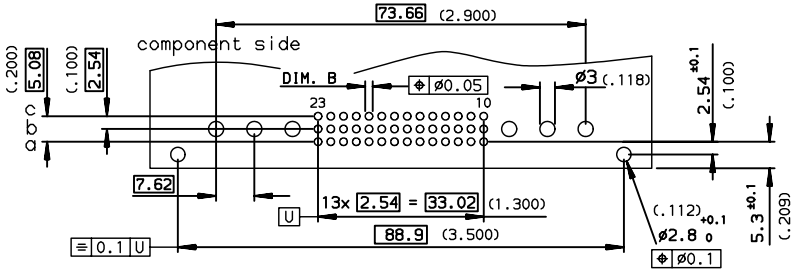

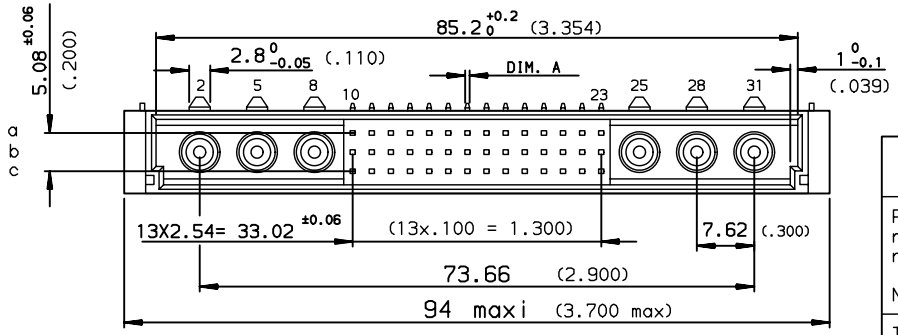

PART NUMBER	8609	□	□	EP	13	□	□	5	□

PIN OUT
rows a-b-c — 3 — 42
rows a-c — 4 — 28

NUMBER OF CONTACTS

TERMINATION
L1 = 2.75 ±0.15 (.108) A = ø0.6 0 -0.08 B = ø0.8 +0.3 0 — 13
L2 = 3.40 ±0.2 (.134)

OPTIONS
no option — 7
with harpoons — for PCB thickness 1.6 mm — H

PERFORMANCE CLASS
DIN 41612 class 3 — 4
DIN 41612 class 2 — 5
DIN 41612 class 1 — 6

TERMINATION TYPE
TIN LEAD — 000E1
LEAD FREE — E1LF

GENERAL CHARATERISTICS and ROHS INFORMATIONS
SEE DRAWING C-8609-0000A

European Views

rev	ecn no	dr	date
A	-	ROU	1997/09/22
B	LS07-0130	HLE	2007/06/04
C	LS07-0211	HLE	2007/08/09
-	-	-	-
-	-	-	-
-	-	-	-
-	-	-	-

www.fciconnect.com

surface ISO 1302 | tolerance std ISO 406 ISO 1101 | projection | mm

TOLERANCES UNLESS OTHERWISE SPECIFIED

Dr	ROUILLARD	1997/09/22	ANGULAR	LINEAR	0.X	±0.1
Eng	ROUILLARD	1997/09/22			0.XX	±0.1
Chr	LEGARE	1997/09/22	0.XX° ±2°		0.XXX	±0.1
Appr	LEGARE	1997/09/22	Product family		DIN	

size A3 | Scale 1.5 | ECN LS07-0211 | Spec ref -

title: RIGHT ANGLE MALE STYLE M WITH POWER PINS FITTED

dwg no C-8609-0612 | Rev. C

catalog no SEE TABLE | CUSTOMER | sheet 1 of 1

REV F - 2006-04-17

Copyright FCI.

PDM: Rev:C STATUS: Released Printed: May 14, 2011