REVISION A

IPL1-1XX-XX-XXX-SH-K

No OF POSITIONS
-02 THRU -25

LEAD STYLE
-02: SINGLE HORIZONTAL .062 BOARD (USE T-1S64-09-XXX)
-03: SINGLE HORIZONTAL .093 BOARD (USE T-1S64-09-XXX)

PLATING SPECIFICATION
-F: FLASH SELECTIVE (USE T-1S64-09-F)
-L: LIGHT SELECTIVE (USE T-1S64-09-L)
-S: SELECTIVE (USE T-1S64-09-S)
-STL: SELECTIVE TIN/LEAD(USE T-1S64-09-STL)

POLARIZATION
-K: KEYED POLARIZATION

ROW SPECIFICATION
-SH: SINGLE HORIZONTAL

FIG. 1
(IPL1-110-02-XXX-SH-K SHOWN)

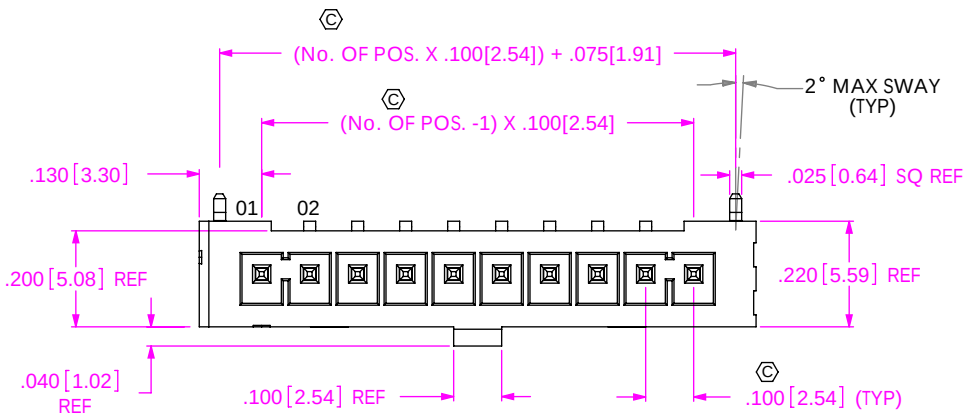

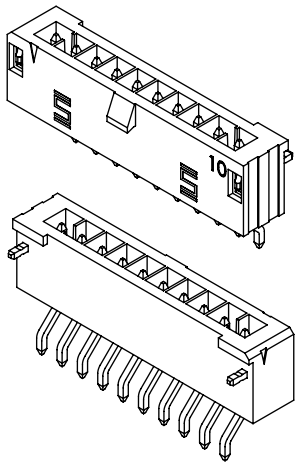

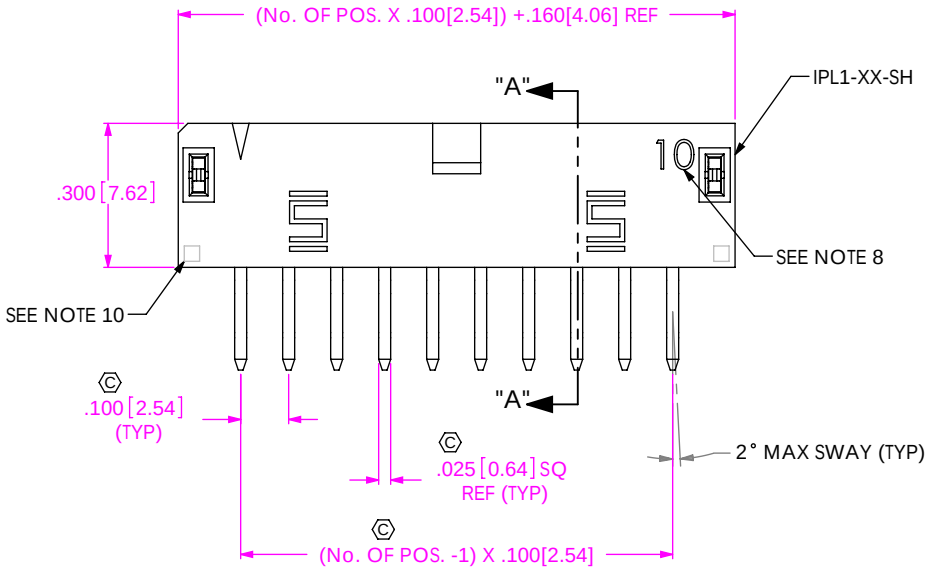

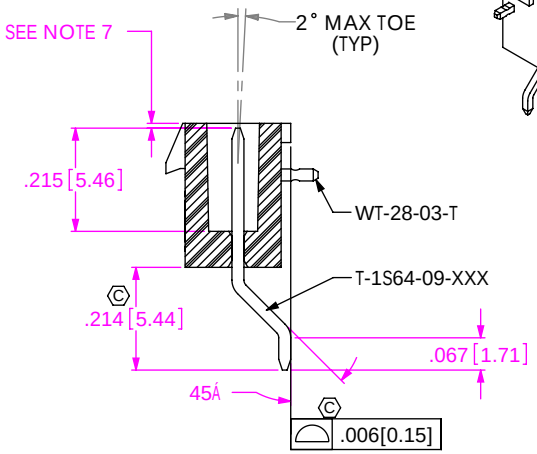

SECTION "A"-"A"
SCALE 2.5 : 1

NOTES:

1. Ⓒ REPRESENTS A CRITICAL DIMENSION.
2. MINIMUM TERMINAL / WELD TAB RETENTION: 1.0LB. [4.4N]
3. PARTS TO BE MOLDED TO POSITION.
4. POST MUST BE WITHIN .005[0.13] OF EACH OTHER.
5. ALL PIN TO PIN DIMENSIONS TO BE MEASURED FROM TIP TO TIP.
6. DIMENSION TO BE MEASURED AT BEND.
7. TIP TO BE FLUSH TO .010[0.254] BELOW TOP OF SHROUD.
8. THIS NUMBER REPRESENTS THE NUMBER OF POSITIONS PER ROW ONLY AND IS NOT INTENDED TO BE USED IN POSITION NUMBERING.
9. PARTS TO BE PACKAGED IN TRAYS.
10. INDENTION FROM WELD TAB CARRIER IS ALLOWABLE

UNLESS OTHERWISE SPECIFIED, DIMENSIONS ARE IN INCHES.
TOLERANCES ARE:
DECIMALS: .XX: ±.01 [.3]; .XXX: ±.005 [.13]; .XXXX: ±.0020 [.051]
ANGLES: 2°

PROPRIETARY NOTE
THIS DOCUMENT CONTAINS INFORMATION CONFIDENTIAL AND PROPRIETARY TO SAMTEC, INC. AND SHALL NOT BE REPRODUCED OR TRANSFERRED TO OTHER DOCUMENTS OR DISCLOSED TO OTHERS OR USED FOR ANY PURPOSE OTHER THAN THAT WHICH IT WAS OBTAINED WITHOUT THE EXPRESSED WRITTEN CONSENT OF SAMTEC, INC.

samtec
520 PARK EAST BLVD, NEW ALBANY, IN 47150
PHONE: 812-944-6733 FAX: 812-948-5047
e-Mail: info@SAMTEC.com code: 55322

MATERIAL: DO NOT SCALE DRAWING SHEET SCALE: 2:1
INSULATOR: LCP, COLOR: BLACK
TERMINAL: PHOS BRONZE

DESCRIPTION: .100[2.54] SINGLE ROW TERMINAL ASSEMBLY
DWG. NO. IPL1-1XX-XX-XXX-SH-K

F:\DWG\MISC\MKTG\IPL1-1XX-XX-XXX-SH-K-MKT.SLDDRW

BY: D. SCHMELZ 10/31/2008 SHEET 1 OF 2

REVISION A

IN-PROCESS 1
FILL WELD TAB

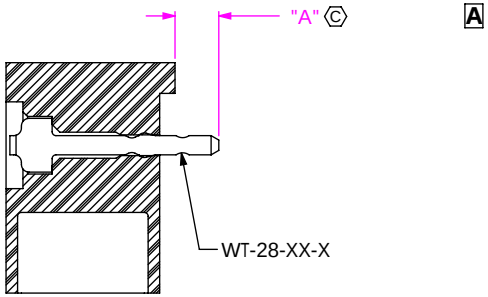

A

IN-PROCESS 2
FILL T-1S64-09-XXX

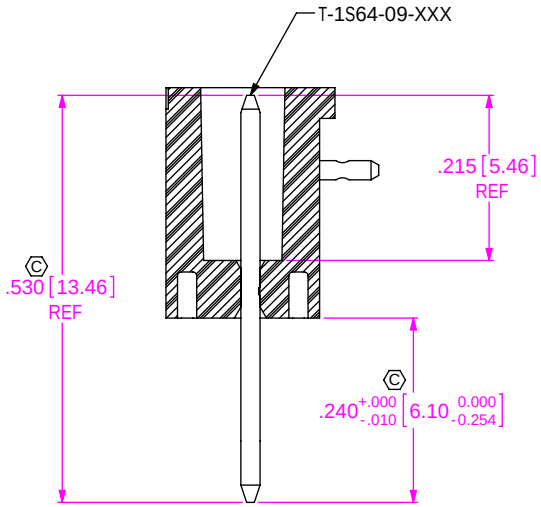

TABLE 1		
LEAD STYLE	"A"	WELD TAB
-02	.055	WT-28-03-X
-03	.086	WT-28-04-X

FIG. 2
(IPL1-125-02-XXX-SH-K SHOWN)
(DIFFERENT AS SHOWN, OTHERWISE SAME AS FIG. 1)

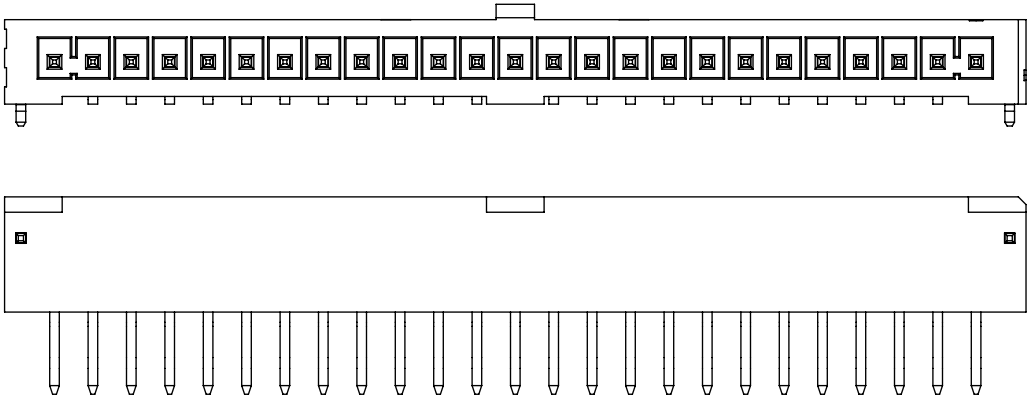

F:\DWG\MISC\MKTG\IPL1-1XX-XX-XXX-SH-K-MKT.SLDDRW

PROPRIETARY NOTE
THIS DOCUMENT CONTAINS INFORMATION CONFIDENTIAL AND PROPRIETARY TO SAMTEC, INC. AND SHALL NOT BE REPRODUCED OR TRANSFERRED TO OTHER DOCUMENTS OR DISCLOSED TO OTHERS OR USED FOR ANY PURPOSE OTHER THAN THAT WHICH IT WAS OBTAINED WITHOUT THE EXPRESSED WRITTEN CONSENT OF SAMTEC, INC.

DO NOT SCALE DRAWING

SHEET SCALE: 2:1

samtec
520 PARK EAST BLVD, NEW ALBANY, IN 47150
PHONE: 812-944-6733 FAX: 812-948-5047
e-Mail: info@SAMTEC.com code: 55322

DESCRIPTION:
.100[2.54] SINGLE ROW TERMINAL ASSEMBLY

DWG. NO.
IPL1-1XX-XX-XXX-SH-K

BY: D. SCHMELZ 10/31/2008 SHEET 2 OF 2