SPECIFICATIONS

S-ATA Connector

LD Series
T/H, Vertical Type
Plug
1.27mm [.050"] Pitch
7 Pos.

Mechanical
Insertion Force: *45N max.*
Withdrawal Force: *10N min.*
Durability: *50 Cycles.*

Electrical
Voltage Rating: *250V.*
Current Rating: *1.5A per pin.*
Contact Resistance: *30 mΩ max., Δ15 mΩ max. after stress.*
Dielectric Withstanding Voltage: *500V AC.*
Insulation Resistance: *1000MΩ min.*

Physical
Housing: *Thermoplastic, UL 94V-0 rating.*
Contact: *Copper alloy*
Plating: *See "ORDERING INFORMATION".*
Operating Temperature: *-55℃ to +105℃*

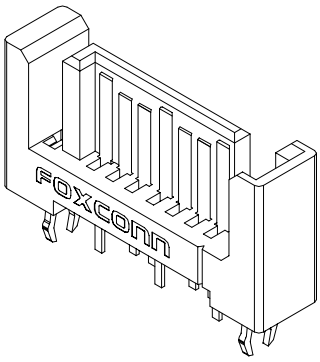

DRAWING

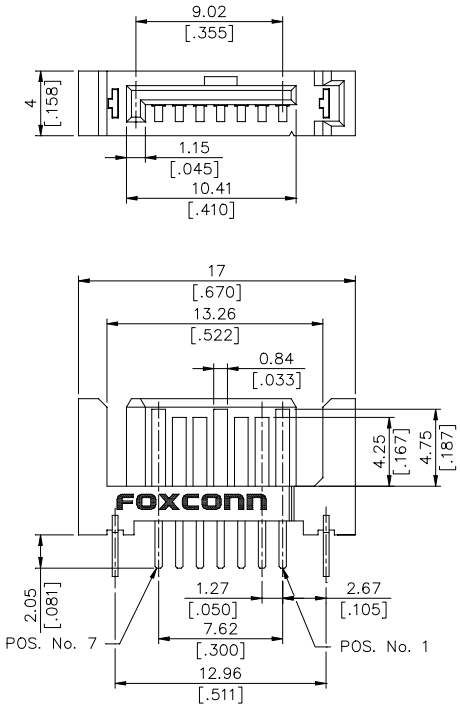

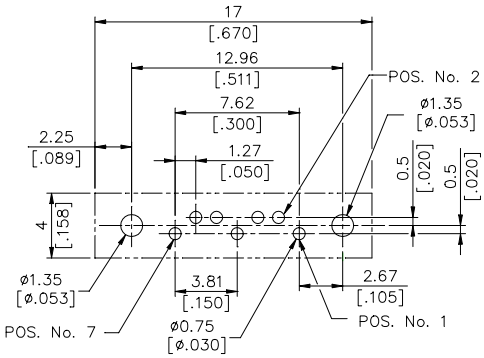

RECOMMENDED P.C.B. LAYOUT

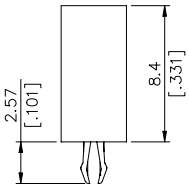

ORDERING INFORMATION

PRODUCT NO. : LD 1 8 07 * - S 14 * * *

- S-ATA Series
- Mating End Type
  1=Host Plug
- Mounting End Type
  8=T/H,Vertical
- No. of Pos.
  07=7 Pos.
- Contact Area Plating
  F=Gold Flash With RoHS Compliance
  H=30u" Gold With RoHS Compliance
  V=15u" Gold With RoHS Compliance
- S-ATA
- Modification Code
- Housing Material
  L/NONE=LCP,Color Black
  5 = PA66,Color Red
  J = PBT,Color Orange
- Package Type
  1/NONE=Tray
  2=Tube
- Tail Length
  NONE=2.05mm
  A=3.30mm

All specification & dimensions are subject to change, please call your nearest Foxconn sales representative for update information.