DRAWING MADE IN THIRD ANGLE PROJECTION

THIS DRAWING IS UNPUBLISHED. RELEASED FOR PUBLICATION ,19 .

© COPYRIGHT 19 BY AMP INCORPORATED. ALL INTERNATIONAL RIGHTS RESERVED.

PROD CODE	LOC	DIST
4085	DF	SO

P	F	ZONE	LTR	DESCRIPTION	DATE	APPD
			M	REV PER 0600-5644-96 MEP	1-97	SG

REVISIONS

PART NO.	DIM A	DIM B	DIM C	TERMINAL PLATING	SIZE	
849587-1	1.125 [28.6]	1.250 [31.7]	.468 [11.9]	1	LGH-2	
849587-2	1.125 [28.6]	1.250 [31.7]	.468 [11.9]	2	LGH-2	OBSOLETE
849587-3	1.000 [25.4]	1.125 [28.6]	.468 [11.9]	1	LGH-2	OBSOLETE
849587-4	1.000 [25.4]	1.125 [28.6]	.468 [11.9]	2	LGH-2	OBSOLETE
849587-5	.875 [22.2]	1.000 [25.4]	.468 [11.9]	1	LGH-2	OBSOLETE
849587-6	.875 [22.2]	1.000 [25.4]	.468 [11.9]	2	LGH-2	OBSOLETE
849587-7	.750 [19.0]	.875 [22.2]	.468 [11.9]	1	LGH-2	OBSOLETE
849587-8	.750 [19.0]	.875 [22.2]	.468 [11.9]	2	LGH-2	OBSOLETE
849587-9	1.812 [46.0]	1.937 [49.2]	.312 [7.9]	1	LGH-3	
1-849587-0	1.812 [46.0]	1.937 [49.2]	.312 [7.9]	2	LGH-3	OBSOLETE
1-849587-1	1.437 [36.5]	1.562 [39.7]	.468 [11.9]	1	LGH-2	
1-849587-2	1.437 [36.5]	1.562 [39.7]	.468 [11.9]	2	LGH-2	OBSOLETE
1-849587-3	.750 [19.0]	.875 [22.2]	.312 [7.9]	1	LGH-3	OBSOLETE
1-849587-4	.750 [19.0]	.875 [22.2]	.312 [7.9]	2	LGH-3	OBSOLETE
1-849587-5	.875 [22.2]	1.000 [25.4]	.312 [7.9]	1	LGH-3	OBSOLETE
1-849587-6	.875 [22.2]	1.000 [25.4]	.312 [7.9]	2	LGH-3	OBSOLETE
1-849587-7	1.000 [25.4]	1.125 [28.6]	.312 [7.9]	1	LGH-3	OBSOLETE
1-849587-8	1.000 [25.4]	1.125 [28.6]	.312 [7.9]	2	LGH-3	OBSOLETE
1-849587-9	1.125 [28.6]	1.250 [31.7]	.312 [7.9]	1	LGH-3	
2-849587-0	1.125 [28.6]	1.250 [31.7]	.312 [7.9]	2	LGH-3	OBSOLETE
6-849587-0	1.812 [46.0]	1.937 [49.2]	.312 [7.9]	3	LGH-3	
6-849587-1	1.437 [36.5]	1.562 [39.7]	.468 [11.9]	1	LGH-2	

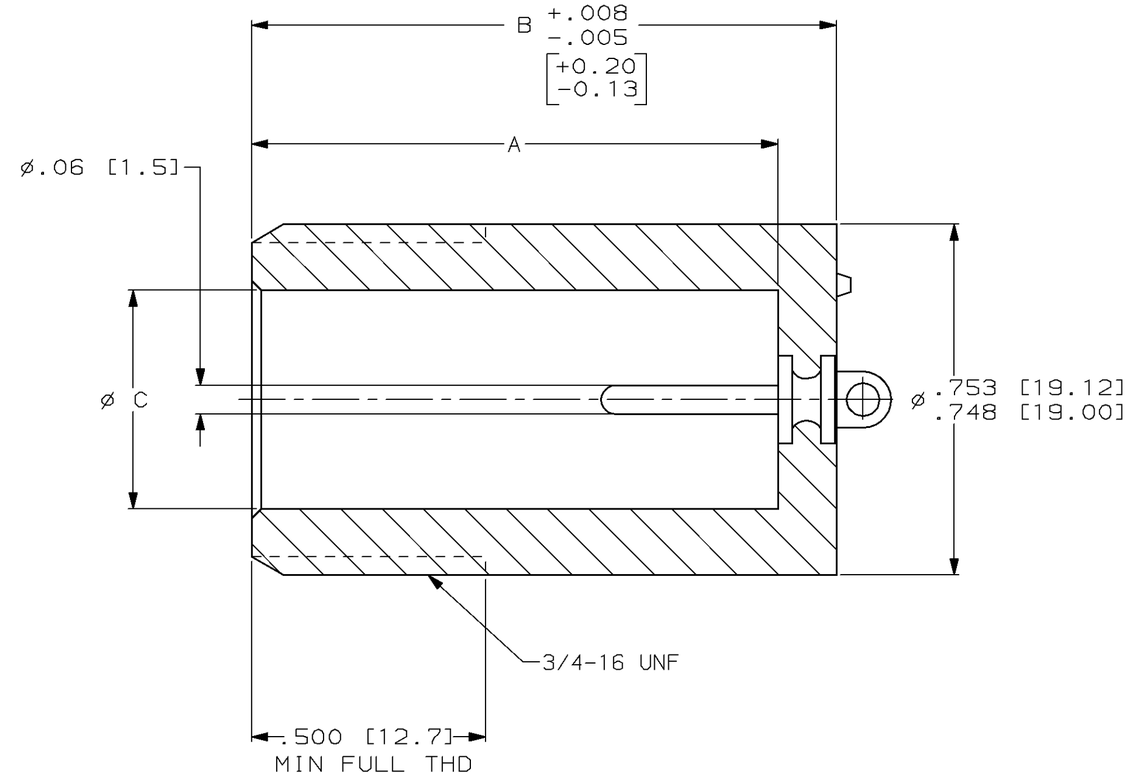

1. TIN PLATED .0001 [0.0025] MIN THK PER MIL-T-10727, TYPE I OR II.
2. GOLD PLATED .000030 [0.00076] MIN THK PER MIL-G-45204, TYPE II.
3. GOLD PLATED .000050 [0.00127] MIN THK PER MIL-G-45204, TYPE II.
4. LGH-2 RECEPTACLE TO MATE WITH AMP LGH-2 LEAD ASSEMBLY.
5. LGH-3 RECEPTACLE TO MATE WITH AMP LGH-3 LEAD ASSEMBLY.

849587

DO NOT SCALE PRINT.
UNLESS SPECIFIED
DIMENSIONS IN INCHES [mm]
TOLERANCES ON :
2 PLC DEC ± .04 [1.0]
3 PLC DEC ± .015 [0.38]
ANGLES ± -

MATERIAL –

FINISH –

DR 7-19-93 C.C.THOMAS
CHK 7-21-93 D.EABY
APPD 7-21-93 D.EABY
APPD 7-21-93 C.C.THOMAS
PRODUCT SPEC –
APPLICATION SPEC –
WEIGHT –

AMP Incorporated
Harrisburg, PA 17105-3608

NAME MOLDED RCPT,LGH-2 & 3

SIZE C | CAGE CODE 00779 | DRAWING NO C-849587

SCALE 4:1 | SHEET 1 OF 1

THIS DRAWING IS A CONTROLLED DOCUMENT FOR AMP INCORPORATED. IT IS SUBJECT TO CHANGE AND THE CONTROLLING ENGINEERING ORGANIZATION SHOULD BE CONTACTED FOR THE LATEST REVISION.

AMP 1471-6 REV 3-92

CUSTOMER DRAWING

29-JAN-97 14:33:07 amp25689 /home/amp25689/edmmod