Tous droits strictement reserves. Reproduction ou communication a des tiers interdite sous quelque forme que ce soit sans autorisation ecrite du propietaire. Propriete de c FCI. Droits de reproduction FCI.

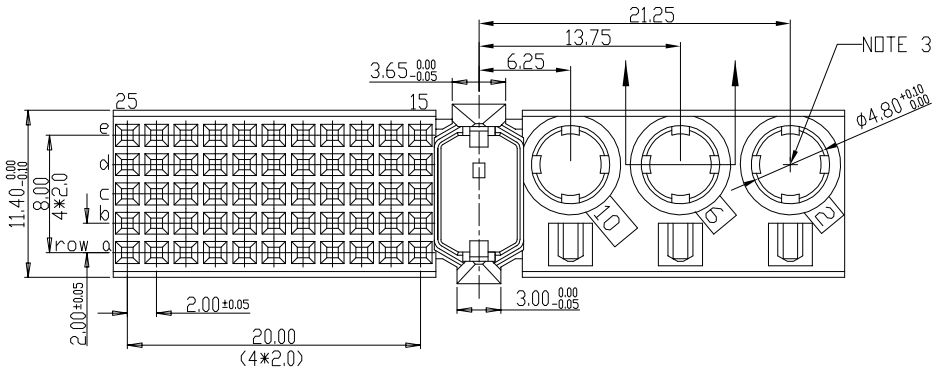

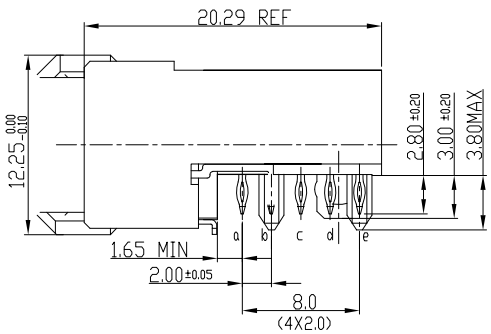

LOADING POWER CONTACTS.

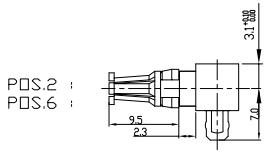

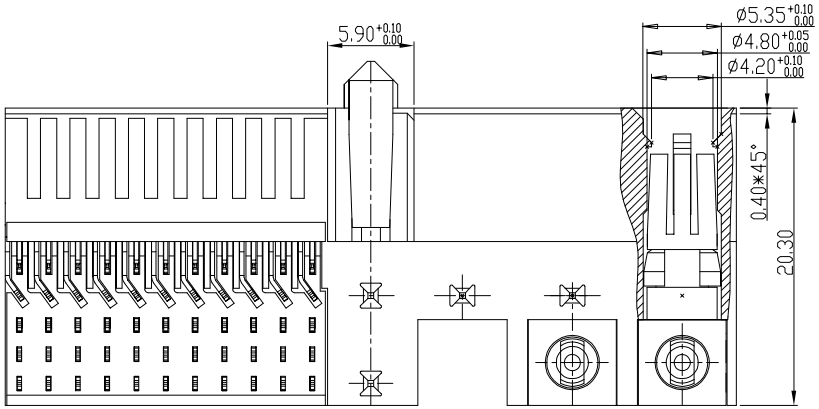

PERFORMANCE CHARACTERISTICS

CURRENT RATING: 1.5 A AT 20°C (FULLY LOADED)
1 A AT 70°C (FULLY LOADED)

RATED VOLTAGE:500 V AC (CONT /CONT)
OPERATING TEMPERATURE : -55°C TO 125°C
CONTACT RESISTANCE :20 mΩ MAX
INSERTION FORCE: 0.75N MAX/CONT
EXTRACTION FORCE : 0.15N MIN /CONT
INSULATION RESISTANCE: 10^4 MΩ MIN

NOTES

1. PLATING: HM2E--PH------LCLF — PLATING CODE (DIGIT 13 AND 14); OPTIONAL : DIGIT 15 AND 16

   -SIGNAL CONTACTS -> " -- " REF DWG NO. BSC201844003
   -POWER CONTACTS -> "--LC" = 0.8um Au over 2.0 um Ni
   all others = 1.5um Au over 2.0 um Ni

2. THIS PRODUCT IS CSA APPROVED.
   THIS PRODUCT IS UL RECOGNIZED.
3. FOR ACTUAL CONTACT LOADING SEE "LOADING POWER CONTACTS".
4. PCB RANGE : MIN 1.6 MM
5. PCB HOLE DEFINITION:

	Ø drilled hole	Cu plating	SnPb plating	Ø finished hole
5.1	3.19 - 3.25	25 um min.	5 um min.	3.02 - 3.20
5.2	0.675 - 0.725	25/50 um min.	4/10 um min.	0.55 - 0.65

6. THIS PRODUCT (LF) MEETS EUROPEAN UNION DIRECTIVES AND OTHER COUNTRY REGULATIONS AS DESCRIBED IN GS-22-008

LAY-OUT P.C.B.- HOLE

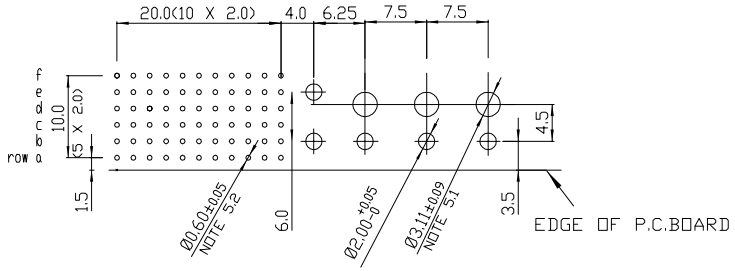

rev	ecn no	dr	date
A	CONVERSION REVISION 03	KN	14-09-01
B	EC B20030	MF	12-02-02
C	DG05-0381	Kason	10-10-05

Material			Spec ref		
Mat code			tolerance: 1DEC±0.2 1DEC 2DEC ± 0.10 2DEC ANGLES±1°HOEKEN	projection	MM
Heattreat					
Plating/Finish					
Dr	M.Fret	19-05-00		size A4	Scale 1.500
Eng			Product family MILLIPICS		
Chr			Model Name	ECN	
Appr			Model Revision	REL Level	
FCI	title: MPACS 5R RA RCP CONN TYPE M			dwg no BSC202444010	Rev. C
Pro/E file	catalog no HM2E31PH6090--(LC)LF			CUSTOMER	sheet 1 of 1

All rights strictly reserved. Reproduction or issue to third parties in any form whatever is not permitted without written authority from the proprietor. Property of FCI. Copyright FCI.