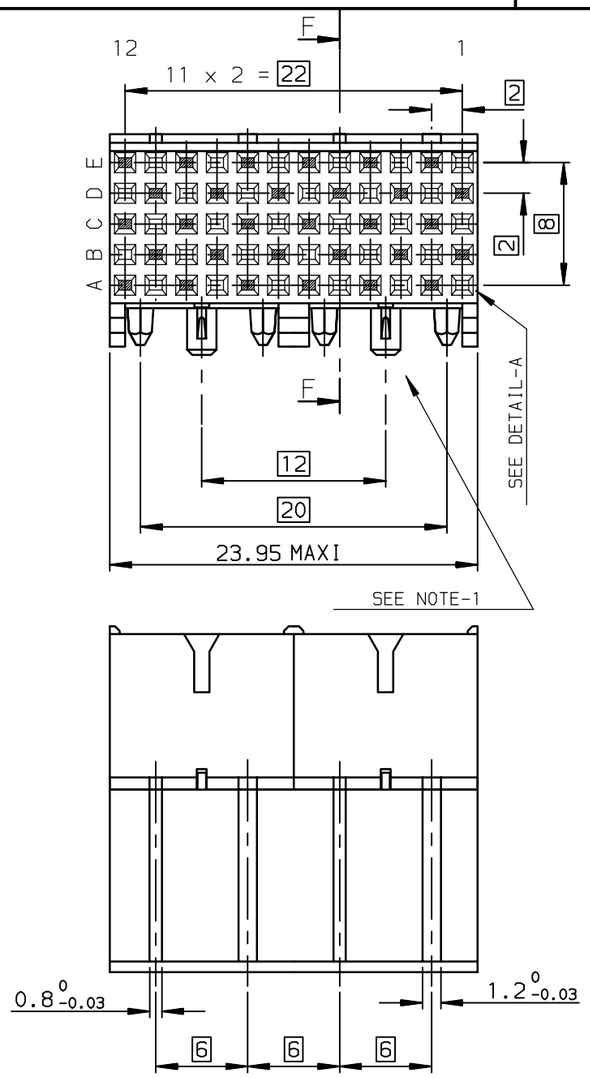


DETAIL-A

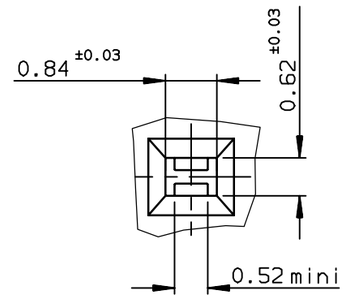


SECTION-FF

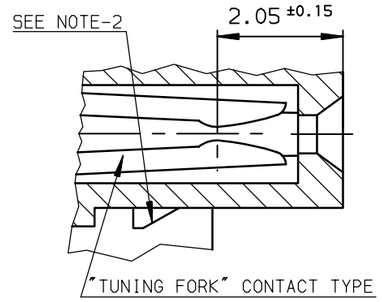


DETAIL OF PRESS-IN PEGS

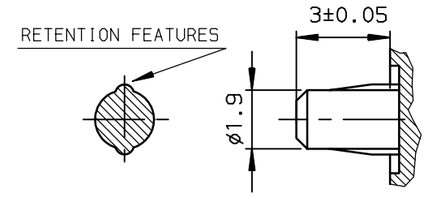


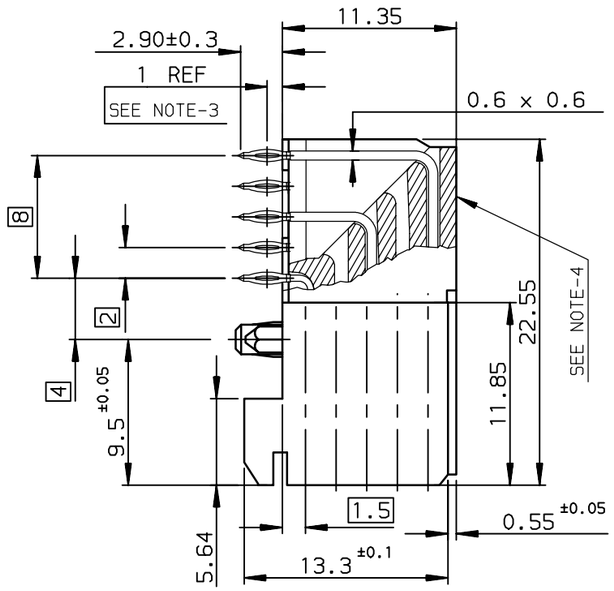


LAYOUT FOR P.C.B

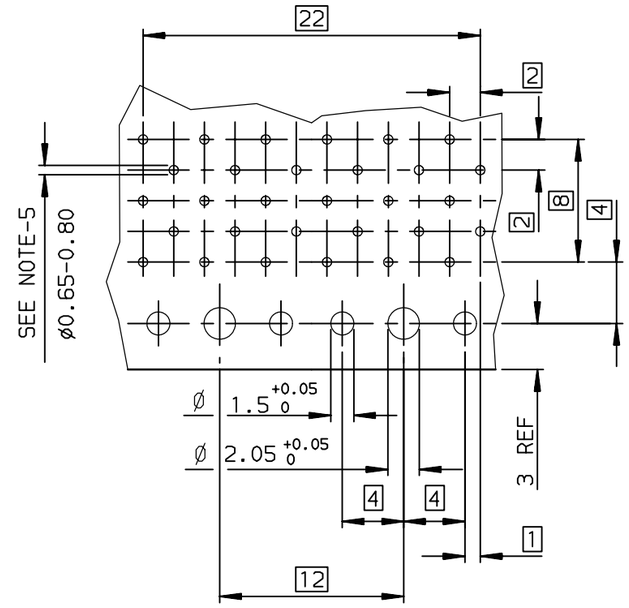


SPECIFIC DATAS:

CHESS PATTERN CTS LOADING
- CTS IN A2-A4-A6-A8-A10-A12
- CTS IN B1-B3-B5-B7-B9-B11
- CTS IN C2-C4-C6-C8-C10-C12
- CTS IN D1-D3-D5-D7-D9-D11
- CTS IN E2-E4-E6-E8-E10-E12

TIN LEAD PART NUMBER

Part Number: HM1F52FDP131H6P

LEAD FREE PART NUMBER

Part Number: HM1F52FDP131H6PLF

GENERAL CHARACTERISTICS AND ROHS INFORMATIONS:

SEE DRAWING C-8626-000P

NOTE-1: PRESS-IN RETENTION PEG

NOTE-2: PLUG FOR CODING KEY FIXING

NOTE-3: EYE OF THE NEEDLE PRESS-FIT CTS TYPE

NOTE-4: FLAT ROCK INSERTION TOOLING IN PCB, SEE DRW REF:C-8626-1003

NOTE-5: METALIZED HOLE DEFINITION,SEE DRW REF:C01-8626-000P

| rev | ecn no | dr | date |
|---|---|---|---|
| A | - | CHA | 2002/02/05 |
| B | LS05-004 | MLE | 2005/02/21 |
| C | LS06-0095 | LGO | 2006/07/06 |
| - | - | - | - |
| - | - | - | - |
| - | - | - | - |
| - | - | - | - |

European Views

| | | | | | | | |
|---|---|---|---|---|---|---|---|
| www.fciconnect.com | | | surface ISO 1302 | tolerance std ISO 406 ISO 1101 | | projection | mm |
| | | | TOLERANCES UNLESS OTHERWISE SPECIFIED | | | | |
| Dr | CHAMPION | 2002/02/05 | ANGULAR | LINEAR | 0.X ±0.1 | size A3 | Scale 2.5 |
| Eng | LENOIR | 2002/02/05 | | | 0.XX ±0.1 | | |
| Chr | LEGARE | 2002/02/05 | 0.XX° ±2° | | 0.XXX ±0.1 | ECN | LS06-0095 |
| Appr | LEGARE | 2002/02/05 | Product family | | METRAL | Spec ref | - |

title: METRAL FEMALE 5 ROWS 30 CTS
CHESS PATTERN CTS LOADING

dwg no: C-8626-11154 Rev. C

catalog no: -

CUSTOMER sheet 1 of 1

Copyright FCI.

REV F - 2006-04-17

PDM: Rev:C STATUS:Released Printed: Aug 26, 2006