THIS DRAWING IS UNPUBLISHED. RELEASED FOR PUBLICATION -,- .
© COPYRIGHT - BY TYCO ELECTRONICS CORPORATION. ALL RIGHTS RESERVED.

LOC	DIST
AD	14

REVISIONS

P	LTR	DESCRIPTION	DATE	DWN	APVD
	C	REVISED PER EC 0G3C-0205-05	08MAR06	SSK	MM

1. PART NO. AND DATE CODE STAMPED APPROX. WHERE SHOWN
2. HOUSING-GLASS FILLED POLYESTER COLOR:BLUE
   STANDARD CONTACT- COPPER ALLOY 725
3. GOLD PL. .000030 MIN. THK. IN CONTACT AREAS, SOLDER PL. .000100 MIN. THK. ON POSTS AND ACTION PIN, NICKEL UNDERPLATE .000050 MIN. THK. ALL OVER
4. REQUIRED HOLE DIAMETER TOLERANCES

REQUIRED HOLE DIAMETER TOLERANCES FOR COMPLIANT SECTION

HOLE DIA ±.03[.001]	PLATING THICKNESS		HOLE DIAMETER		COPPER HARDNESS (KNOOP)	PAD DIA MIN
	COPPER	TIN/LEAD	AFTER PLATING	AFTER REFLOW		
1.15 [.0453]	0.03-0.08 [.001-.003]	0.008 MIN [.0003] MIN	0.94-1.09 [.037-.043]	0.914-1.09 [.0036-.043]	150 MAX	1.57 [.062]
1.15 [.0453]	NOT PLATED THRU					1.65 [.065]

5. OPTIONAL: KEYING PLUG FOR INTERCONTACT KEYING IS 118982-1.
6. OPTIONAL: CARD GUIDE (BASE NO 117169)
7. FOR APPLICATION REFER TO AMP SPEC 114-26002
8. THE CARD SLOT DIMENSION FOR TOTAL CONNECTOR(BOTH HALVES) IS (TOTAL NO. OF POSITIONS -1)(.125) +(2 X .125), TOLERANCE IS ±.0085 PLUS THE TRUE POSITIONS TOLERANCE ON THE BOARD HOLES
9. ALL PARTS ASSEMBLED IN MEXICO MUST BE HOT STAMPED "ASSY IN MEXICO".THE WORD "MEXICO" CAN BE SUBSTITUTED ONLY WHERE PART SIZE PROHIBITS STAMPING "ASSY IN MEXICO", HOT STAMP PER 115-9009, APPROX WHERE SHOWN, SIDE OPTIONAL.
10. GOLD PL. .000030 MIN. THK. IN CONTACT AREAS, MATTE TIN PL. .000100 MIN. THK. ON POSTS AND ACTION PIN, NICKEL UNDERPLATE .000050 MIN. THK. ALL OVER

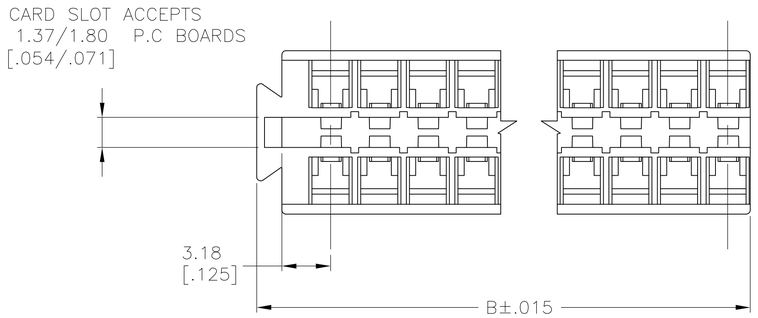

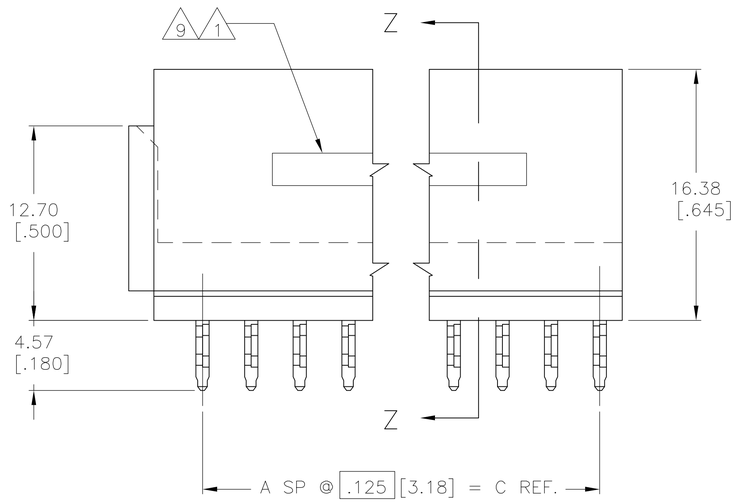

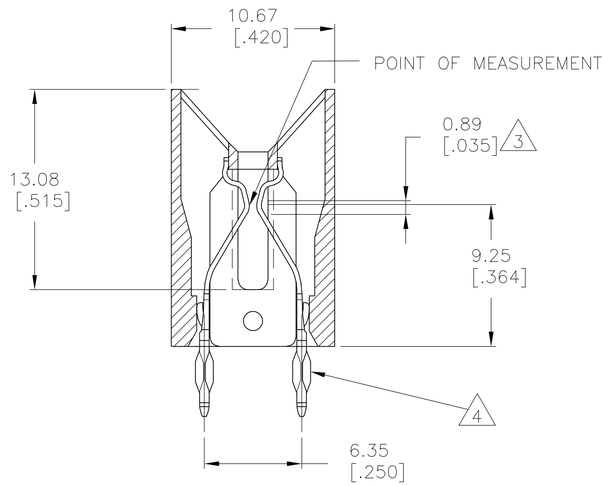

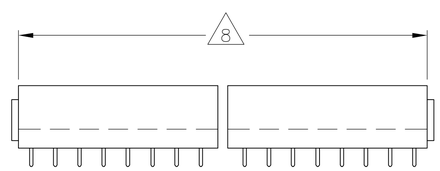

	C	B	A	POSN.	PART NO.
	53.97[2.125]	60.27[2.373]	17	18	8-119840-2
	117.47[4.625]	123.77[4.873]	37	38	5-119840-9
	53.97[2.125]	60.27[2.373]	17	18	3-119840-2
OBSOLETE			~~59~~	~~60~~	~~3-119840-1~~
OBSOLETE			~~44~~	~~45~~	~~1-119840-6~~
	117.47[4.625]	123.77[4.873]	37	38	119840-9
OBSOLETE			~~34~~	~~35~~	~~119840-6~~
OBSOLETE			~~29~~	~~30~~	~~119840-1~~

THIS DRAWING IS A CONTROLLED DOCUMENT.

DIMENSIONS: mm [INCHES]

TOLERANCES UNLESS OTHERWISE SPECIFIED:
0 PLC ± -
1 PLC ± -
2 PLC ± -
3 PLC ± .010
4 PLC ± -
ANGLES ± 3°

MATERIAL 2

FINISH 3 10

DWN 9-21-87 —
CHK — —
APVD 9-21-87 —
PRODUCT SPEC —
APPLICATION SPEC —
WEIGHT —

tyco Electronics
Tyco Electronics Corporation
Harrisburg, Pa 17105-3608

NAME CONNECTOR ASSY, AMP PACE .125 X .250

SIZE	CAGE CODE	DRAWING NO	RESTRICTED TO
A1	00779	C-119840	—

CUSTOMER DRAWING

SCALE 5:1 SHEET 1 OF 1 REV C