THIS DRAWING IS UNPUBLISHED. RELEASED FOR PUBLICATION - ,- .
© COPYRIGHT - BY TYCO ELECTRONICS CORPORATION. ALL RIGHTS RESERVED.

LOC	DIST
GP	00

REVISIONS

P	LTR	DESCRIPTION	DATE	DWN	APVD
	F	REVISED PER ECO-09-002944	19MAR2009	CR	SB

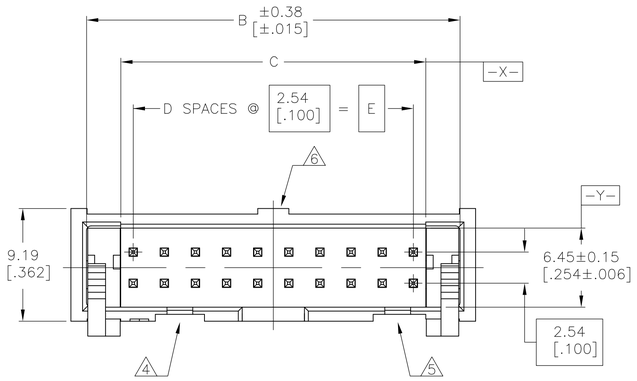

1. HOUSING: PBT, UL94V-0, COLOR: BLUE.
   POSTS: PHOSPHOR BRONZE.
   LATCHES: ZINC ALLOY.
2. POSTS: GOLD FLASH OVER PALLADIUM-NICKEL PLATE, 0.76μm[.000030] MIN TOTAL ON MATING AREA, 2.54μm[.000100] MIN TIN PLATE ON SOLDER-TAIL, ALL OVER 1.27μm[.000050] MIN NICKEL UNDERPLATE ON ENTIRE POST.
   OR
   0.76μm[.000030] MIN GOLD PLATE ON MATING AREA, 2.54μm[.000100] MIN TIN PLATE ON THE SOLDER-TAIL, 1.27μm[.000050] MIN NICKEL UNDERPLATE ON THE ENTIRE POST.
   LATCHES: BLACK NICKEL OVER COPPER.
3. DATUMS S & T TO BE ESTABLISHED BY CUSTOMER.
4. NO KEYING SLOT ON THIS END FOR 6, 10 & 14 POSITION ASSEMBLIES.
5. NO KEYING SLOT ON THIS END FOR 6 & 10 POSITION ASSEMBLIES.
6. NO STANDOFF FOR 6, 10, 14 & 16 POSITION ASSEMBLIES.
7. ALTERNATE LOCATION/ORIENTATION FOR POSITION #1 INDICATOR.

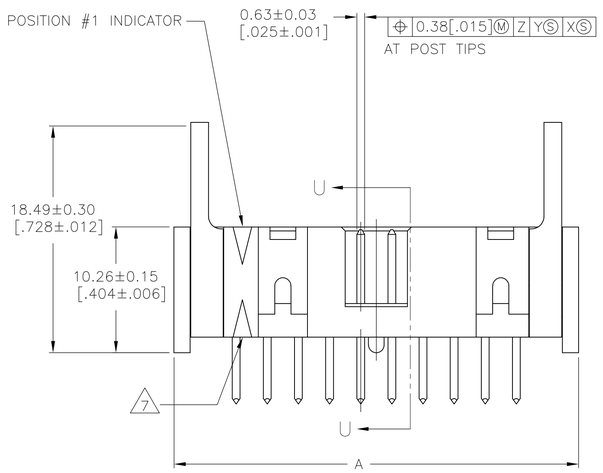

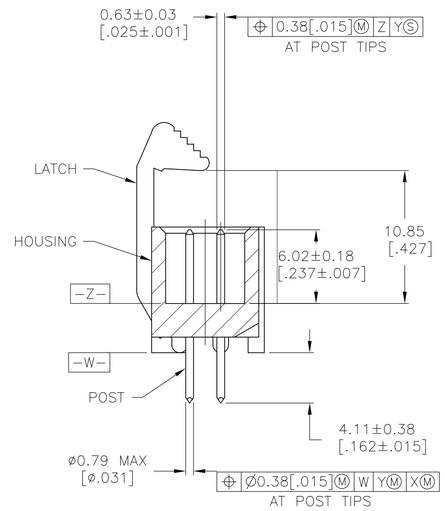

SECTION U-U

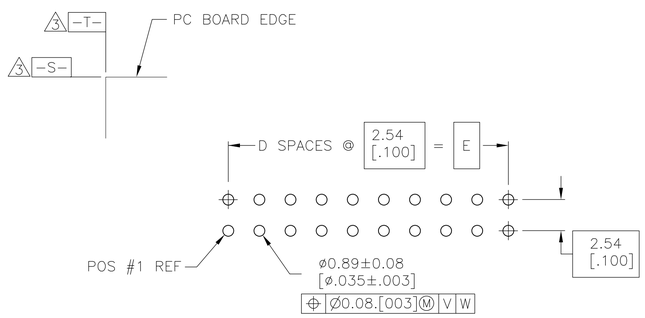

RECOMMENDED PC BOARD LAYOUT
(VIEWED FROM CONNECTOR SIDE)

	E	D	C	B	A	NO OF POS	PART NUMBER
	73.66 [2.900]	29	75.69 [2.980]	81.18 [3.196]	83.82 [3.300]	60	3-1761713-6
	60.96 [2.400]	24	62.99 [2.480]	68.48 [2.696]	71.12 [2.800]	50	3-1761713-5
	48.26 [1.900]	19	50.29 [1.980]	55.78 [2.196]	58.42 [2.300]	40	3-1761713-3
	40.64 [1.600]	16	42.67 [1.680]	48.16 [1.896]	50.80 [2.000]	34	3-1761713-1
OBSOLETE	30.48 [1.200]	12	32.51 [1.280]	38.00 [1.496]	40.64 [1.600]	26	2-1761713-9
	27.94 [1.100]	11	29.97 [1.180]	35.46 [1.396]	38.10 [1.500]	24	2-1761713-8
	22.86 [.900]	9	24.89 [.980]	30.38 [1.196]	33.02 [1.300]	20	2-1761713-7
	17.78 [.700]	7	19.81 [.780]	25.30 [.996]	27.94 [1.100]	16	2-1761713-6
	15.24 [.600]	6	17.27 [.680]	22.76 [.896]	25.40 [1.000]	14	2-1761713-5
	10.16 [.400]	4	12.19 [.480]	17.68 [.696]	20.32 [.800]	10	2-1761713-3
	5.08 [.200]	2	7.11 [.280]	12.60 [.496]	15.24 [.600]	6	2-1761713-1

THIS DRAWING IS A CONTROLLED DOCUMENT.

DIMENSIONS: mm [INCHES]

TOLERANCES UNLESS OTHERWISE SPECIFIED:
0 PLC ± -
1 PLC ± -
2 PLC ± -
3 PLC ± 0.13[.005]
4 PLC ± -
ANGLES ± -

MATERIAL 1 | FINISH 2

DWN B.CRISAMORE/DTI 30JUN05
CHK S.BOLASH 30JUN05
APVD M.WALMSLEY 30JUN05

PRODUCT SPEC —
APPLICATION SPEC —
WEIGHT —

CUSTOMER DRAWING

Tyco Electronics
Tyco Electronics Corporation
Harrisburg, PA 17105-3608

NAME HEADER ASSEMBLY, SHORT EJECT LATCH, VERTICAL, LOW PROFILE, IDC
—

SIZE	CAGE CODE	DRAWING NO	RESTRICTED TO
A1	00779	C-1761713	—

SCALE	SHEET	REV
4:1	1 OF 1	F