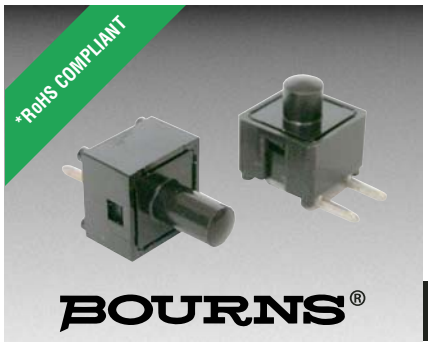

Features

- Contact type: contact spring
- Variety of lever lengths
- Additional models and versions available

1543 - Push Switch

Characteristics

Switch Travel.....0.6 to 0.8 mm
Actuating Force.....0.8 to 2.4 N
Bounce Time .....45 µsec. max.
Switch Function .....1 pole push switch
Switch Rating .....24 V/0.01 A without inductive load
Temperature Range.....-25 °C to +70 °C
Switch Life .....50,000 clicks

How to Order

1543 - 300 - 113

Model Type
- 1543

Terminal & Lever Style
- 300
- 650

Other versions available upon request.

Lever Length
113 = 11.3 mm
130 = 13.0 mm
135 = 13.5 mm
149 = 14.9 mm
185 = 18.5 mm
200 = 20.0 mm
Other lengths available upon request.

Other versions available upon request.

Product Dimensions

1543-300

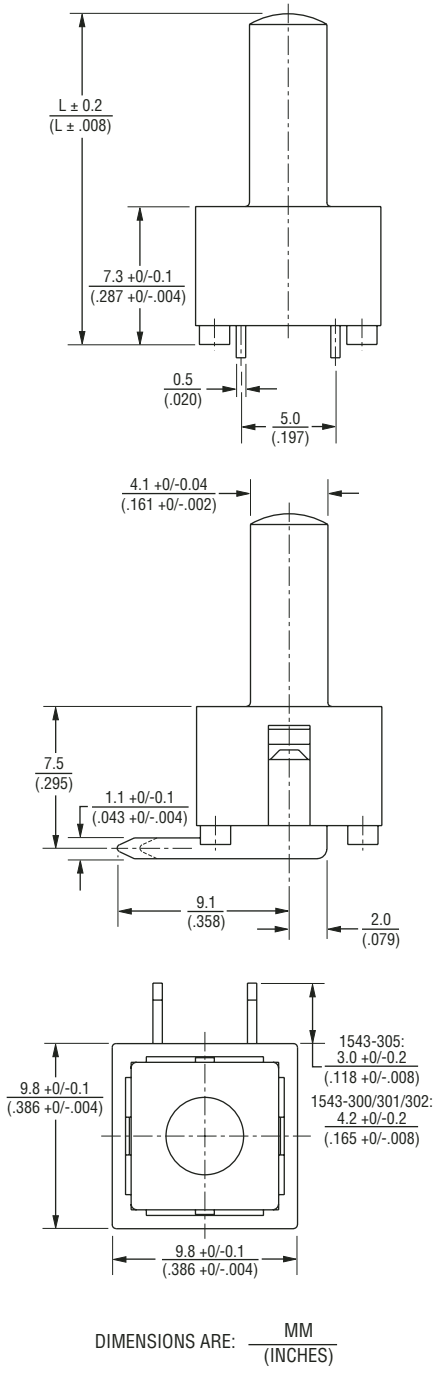

1543-650

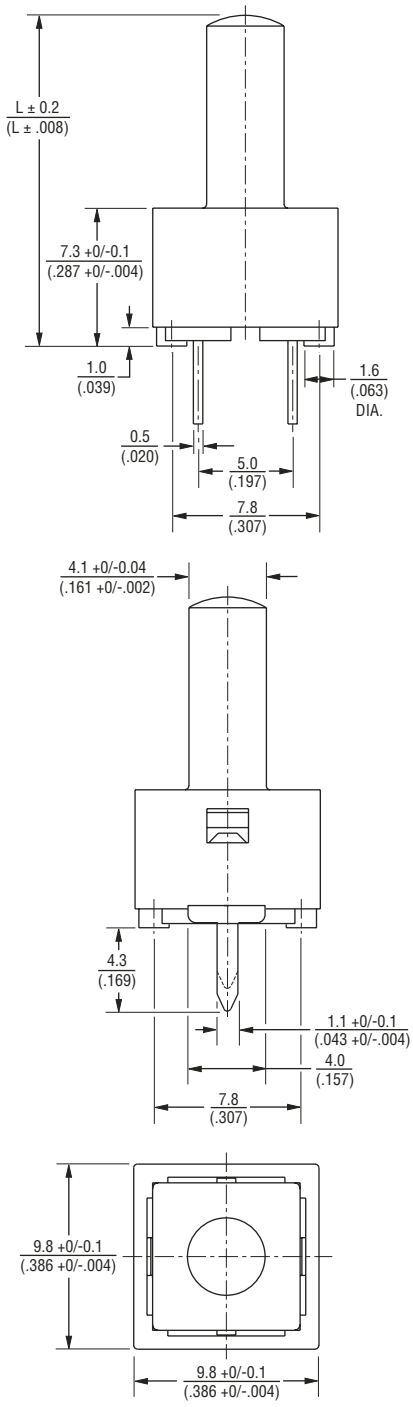

Asia-Pacific:
Tel: +886-2 2562-4117
Fax: +886-2 2562-4116
Europe:
Tel: +41-41 768 5555
Fax: +41-41 768 5510
The Americas:
Tel: +1-951 781-5500
Fax: +1-951 781-5700
www.bourns.com

REV. 06/08

*RoHS Directive 2002/95/EC Jan 27 2003 including Annex
Specifications are subject to change without notice.
Customers should verify actual device performance in their specific applications.