SPECIFICATIONS

VGA Connector

DV Series
Right Angle Type, T/H
2.41mm [.100"] Pitch
78 Pos.

Mechanical

Contact Retention Force: *1.82kg (4.00Lb) min.*
Contact Engagement Force: *0.34kg (0.75Lb) max.*
Contact Separation Force: *0.021kg (0.05Lb) min.*
Durability: *500 Cycles*

Electrical

Current Rating: *2A*
Contact Resistance: *15mΩ max.*
Dielectric Withstanding Voltage: *1000V AC/1min min.*
Insulation Resistance: *5000MΩ min.*

Physical

Housing: *Thermoplastic, UL 94V-0 rated in Black Color*
Contact: *Copper alloy*
Plating: *See "ORDERING INFORMATION"*
Operating Temperature: *-20℃ to +85℃*
Recommended Thickness of PCB: *1.57[.062]*

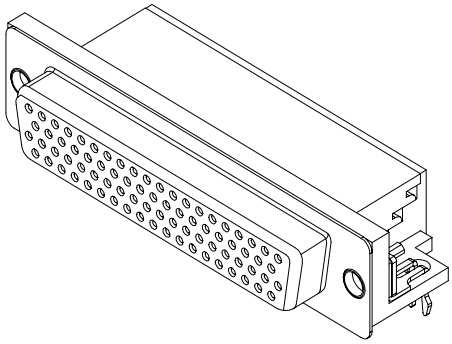

DRAWING

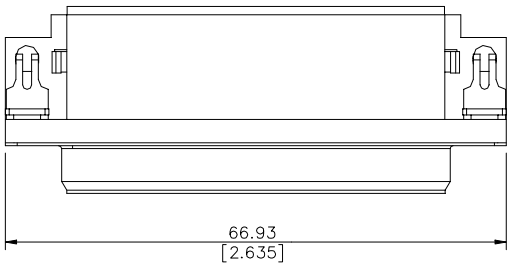

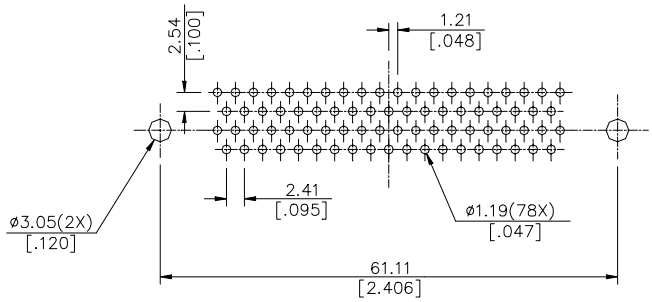

RECOMMENDED P.C.B. LAYOUT

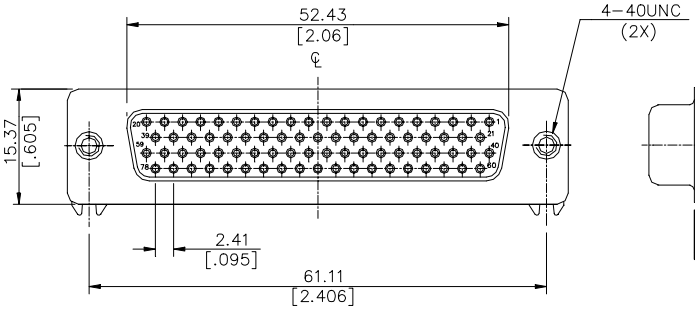

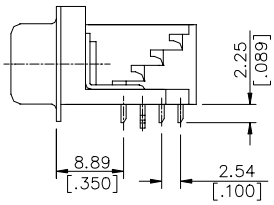

ORDERING INFORMATION

PRODUCT NO.: DV 1 1 6 0 * - G4 - 4F

- VGA Series
- Body Type
  1=Right Angle PCB Mount
- Termnation Type
  1=Female
- NO. of Pos.
  6=H/D 78 Pos.
- Body Length
  0=8.89
- Contact Area Plating
  1=Gold Flash
  2=20u" Gold
  3=30u" Gold
- Extension Code
- Lead Free Code

All specification & dimensions are subject to change, please call your nearest Foxconn sales representative for update information.