DATA CONTAINED IN THIS DOCUMENT IS PROPRIETARY OF TROMPETER ELECTRONICS INC. AND SHALL NOT BE DISCLOSED, COPIED OR USED FOR PROCUREMENT OR MANUFACTURE WITHOUT EXPRESS WRITTEN PERMISSION.

REVISIONS

REV	DESCRIPTION	DATE	APPROVED
E	REVISED PER ECO 15768	2-3-05	[illegible]

RED INDICATES ORIGINAL

TABLE 1

DASH NUMBER	CENTER CONTACT/ INTERMEDIATE CONTACT TYPE	FIGURE NUMBER
-1	SOCKET / PIN	1
-2	PIN / SOCKET	
-3	SOCKET / PIN	2
-4	PIN / SOCKET	
-5	SOCKET / PIN	3
-6	PIN / SOCKET	
-7	SOCKET / PIN	4
-8	PIN / SOCKET	

TABLE 2

CABLE GROUP NUMBER	CABLES ACCOMMODATED 7	ASSEMBLE PER
-201	M17/176-00002	TAI-162
-202	TWC-78-1, TROMPETER	
-203	TWC-124-1A, TROMPETER	
-204	10602, RAYCHEM	
-205	TWAC-78-1F2, TROMPETER	
-206	7826D0130, RAYCHEM	
-208	202-3927, MICRODOT	
-209	202-3942, MICRODOT	
-212	2524E0114, RAYCHEM	
-217	GC875TM24H, GRUMMAN	
-218	EPD221888, RAYCHEM	
-219	2526D1114, RAYCHEM	
-220	GC875RR1, GRUMMAN	
-221	10614, RAYCHEM	
-222	10613, RAYCHEM	
-223	HMS2-1149, HUGHES	

7 CHECK WITH CABLE MANUFACTURER FOR OUTGASSING PROPERTIES OF THE SELECTED CABLE

6. ALL MATERIALS MEET THE OUTGASSING REQUIREMENTS OF NASA SPECIFICATION SP-R-0022A AND THE REQUIREMENTS OF TEI VACUUM READY SPECIFICATION TT-09

5 THE ONE WIDE (.080) SLOT LOCATION IS SHOWN BY A BLUE ASTERISK ON THE O.D. OF THE BAYONET SLEEVE GUARD-RING FOR -3 AND SUBSEQUENT DASH NUMBERS

4 SEALING SLEEVE AND CRIMP BUSHING SUPPLIED LOOSE WITH EACH CONNECTOR EXCEPT NOT USED ON -205, -208 AND -223

3. EXAMPLE OF COMPLETE PART NUMBER:

305-1236-1-201

- 305-1236 — BASIC PART NUMBER
- 1 — DASH NUMBER, LUG POLARIZATION, CENTER AND INTERMEDIATE CONTACT TYPE (SEE TABLE 1)
- 201 — CABLE GROUP NUMBER (SEE TABLE 2)

2. CONCENTRIC TWINAX 4 PIECE ASSEMBLY, FULL CRIMP CABLE PLUG, SOCKET CENTER CONTACT AND PIN INTERMEDIATE CONTACT OR PIN CENTER CONTACT AND SOCKET INTERMEDIATE CONTACT

1. FINISH: TFS-1U (500 HOURS SALT SPRAY; NICKEL)

NOTES: UNLESS OTHERWISE SPECIFIED.

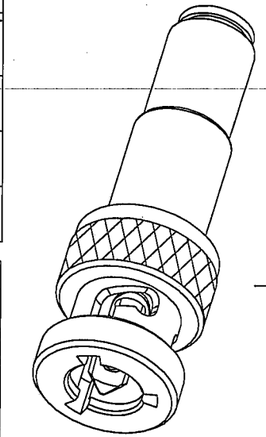

SCALE 2/1

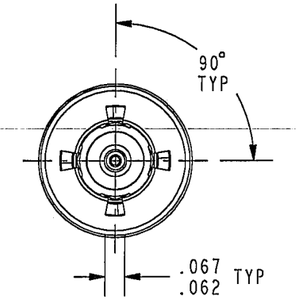

FIGURE 1

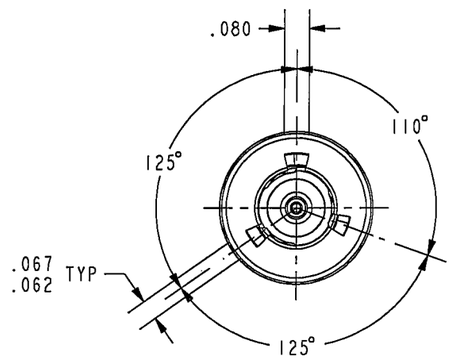

FIGURE 2

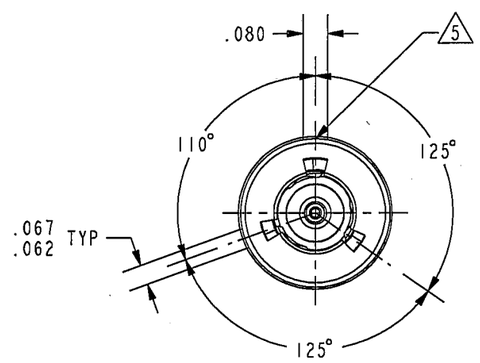

FIGURE 3

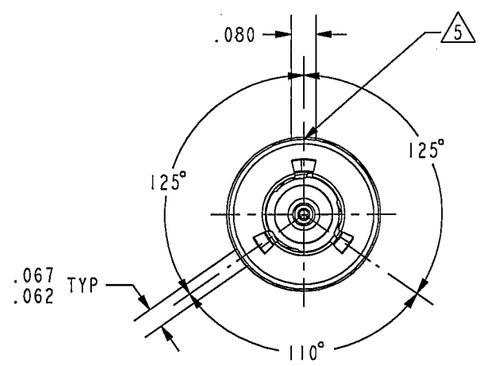

FIGURE 4

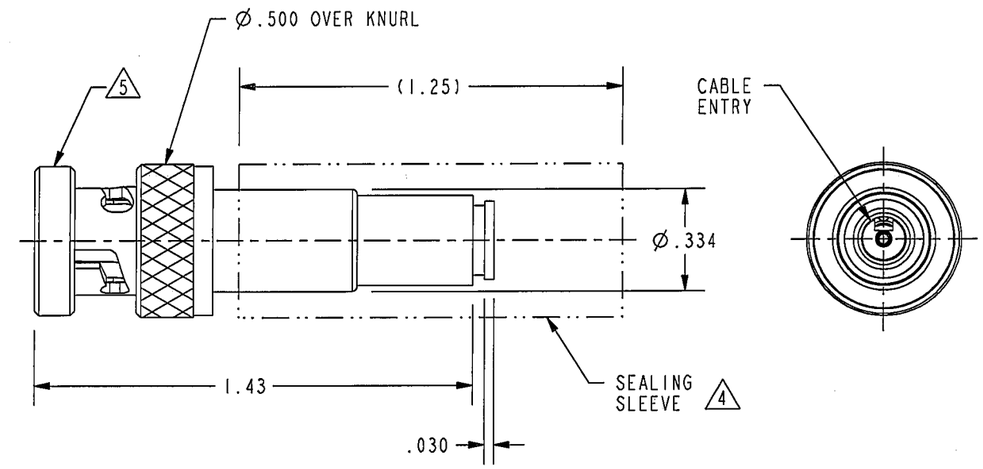

-3-221 SHOWN

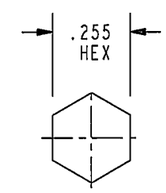

RECOMMENDED HEX CRIMP
SCALE 2.000

INTERPRET DRAWING PER MIL-STD-100. DIMENSIONS ARE IN INCHS AND INCLUDE FINISH THICKNESS UNLESS OTHERWISE SPECIFIED	TOL: UNLESS SPECIFIED .XX ± .02 .XXX ± .010 ANGLE ± 1°	TROMPETER ® ELECTRONICS, INC.	
DRN L.M. 2-1-05	MATERIAL	TITLE: PL455AC/FLP/FLS/PP/PS/RP/RS/WP/WS VACUUM READY	
CHK T.Kha 2-1-05			
QUALITY MS 2/2/05	FINISH		
MANUF BP 2/2/05		SIZE B / CAGE CODE 14949	DRAWING NO. 305-1236 / REV E
APPROVED WS 2/1/05			
NEXT ASSY	PROJ-FILE NO. 305-1236 / DO NOT SCALE DWG	SCALE 2/1 / DATE 4-28-99	SHEET 1C