THIS DRAWING IS UNPUBLISHED. RELEASED FOR PUBLICATION - ,- .
© COPYRIGHT - BY TYCO ELECTRONICS CORPORATION. ALL RIGHTS RESERVED.

LOC	DIST
GP	00

REVISIONS

P	LTR	DESCRIPTION	DATE	DWN	APVD
	F	REVISED PER ECO-08-014877	19JUN08	JDP	SLB

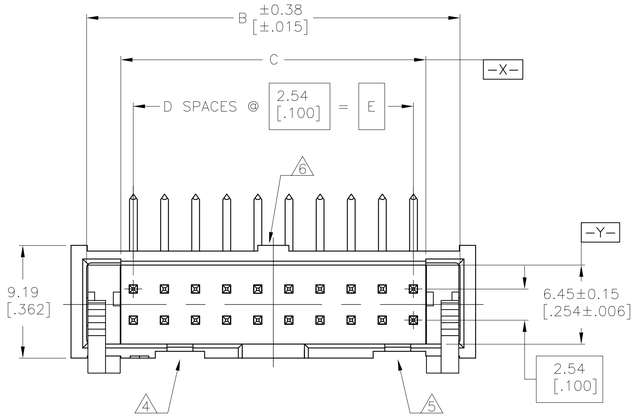

1. HOUSING: PBT, UL94V-0, COLOR: BLUE.
   POSTS: PHOSPHOR BRONZE.
   LATCHES: ZINC ALLOY.
2. POSTS: GOLD FLASH OVER PALLADIUM-NICKEL PLATE, 0.76µm[.000030] MIN TOTAL ON MATING AREA, 2.54µm[.000100] MIN TIN PLATE ON SOLDER-TAIL, ALL OVER 1.27µm[.000050] MIN NICKEL UNDERPLATE ON ENTIRE POST.
   OR
   0.76µm[.000030] MIN GOLD PLATE ON MATING AREA, 2.54µm[.000100] MIN TIN PLATE ON THE SOLDER-TAIL, 1.27µm[.000050] MIN NICKEL UNDERPLATE ON THE ENTIRE POST.
   LATCHES: BLACK NICKEL OVER COPPER.
3. DATUMS S & T TO BE ESTABLISHED BY CUSTOMER.
4. NO KEYING SLOT ON THIS END FOR 8, 10 & 14 POSITION ASSEMBLIES.
5. NO KEYING SLOT ON THIS END FOR 8 & 10 POSITION ASSEMBLIES.
6. NO STANDOFF FOR 8, 10, 14 & 16 POSITION ASSEMBLIES.

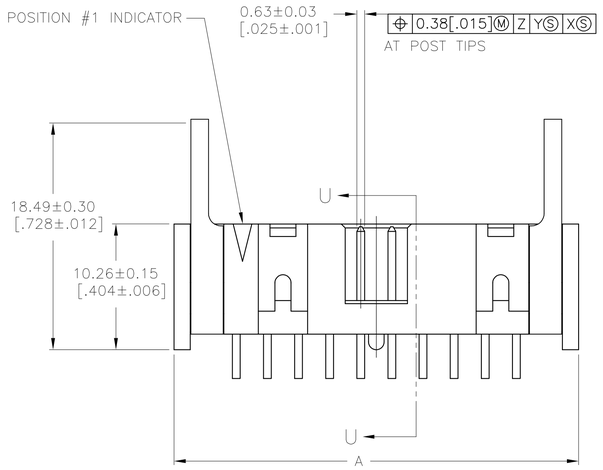

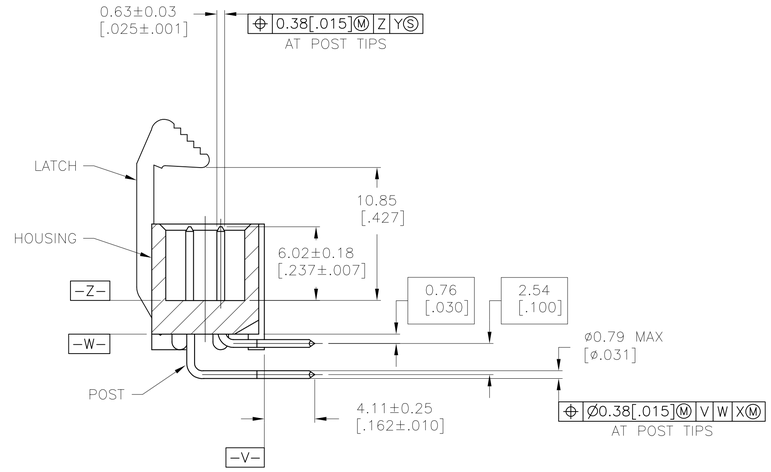

SECTION U-U

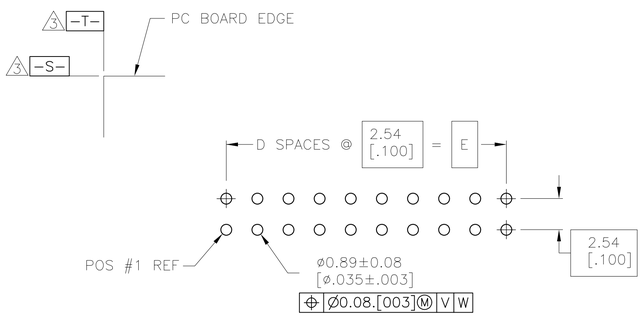

RECOMMENDED PC BOARD LAYOUT
(VIEWED FROM CONNECTOR SIDE)

	E	D	C	B	A	NO OF POS	PART NUMBER
OBSOLETE	60.96 [2.400]	24	62.99 [2.480]	68.48 [2.696]	71.12 [2.800]	50	3-1761714-5
	40.64 [1.600]	16	42.67 [1.680]	48.16 [1.896]	50.80 [2.000]	34	3-1761714-1
	30.48 [1.200]	12	32.51 [1.280]	38.00 [1.496]	40.64 [1.600]	26	2-1761714-9
	27.94 [1.100]	11	29.97 [1.180]	35.46 [1.396]	38.10 [1.500]	24	2-1761714-8
OBSOLETE	22.86 [.900]	9	24.89 [.980]	30.38 [1.196]	33.02 [1.300]	20	2-1761714-7
	17.78 [.700]	7	19.81 [.780]	25.30 [.996]	27.94 [1.100]	16	2-1761714-6
OBSOLETE	15.24 [.600]	6	17.27 [.680]	22.76 [.896]	25.40 [1.000]	14	2-1761714-5
	10.16 [.400]	4	12.19 [.480]	17.68 [.696]	20.32 [.800]	10	2-1761714-3
	7.62 [.300]	3	9.65 [.380]	15.14 [.596]	17.78 [.700]	8	2-1761714-2

THIS DRAWING IS A CONTROLLED DOCUMENT.

DIMENSIONS: mm [INCHES]

TOLERANCES UNLESS OTHERWISE SPECIFIED:
0 PLC ± –
1 PLC ± –
2 PLC ± –
3 PLC ± 0.13[.005]
4 PLC ± –
ANGLES ± –

MATERIAL 1
FINISH 2

DWN B.CRISAMORE/DTI 30JUN05
CHK S.BOLASH 30JUN05
APVD M.WALMSLEY 30JUN05
PRODUCT SPEC —
APPLICATION SPEC —
WEIGHT —

Tyco Electronics
Tyco Electronics Corporation
Harrisburg, PA 17105-3608

NAME HEADER ASSEMBLY, SHORT EJECT LATCH, RIGHT ANGLE, LOW PROFILE, IDC
—

SIZE	CAGE CODE	DRAWING NO	RESTRICTED TO
A1	00779	C-1761714	—

CUSTOMER DRAWING | SCALE 4:1 | SHEET 1 OF 1 | REV F