MARKETING SALES DRAWING

DIMENSIONS IN INCHES - DO NOT SCALE THIS DRAWING
DIMENSIONS IN METRIC - [ ]

This drawing is the property of Tusonix, Inc., and may not be used, reproduced, published or disclosed to others without expressed authorization by Tusonix Inc.

Electrical Testing per Tusonix standard test plans and Mil-Std-202 Test Methods.

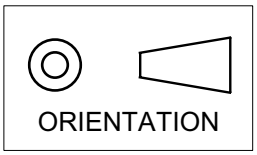

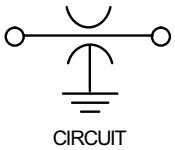

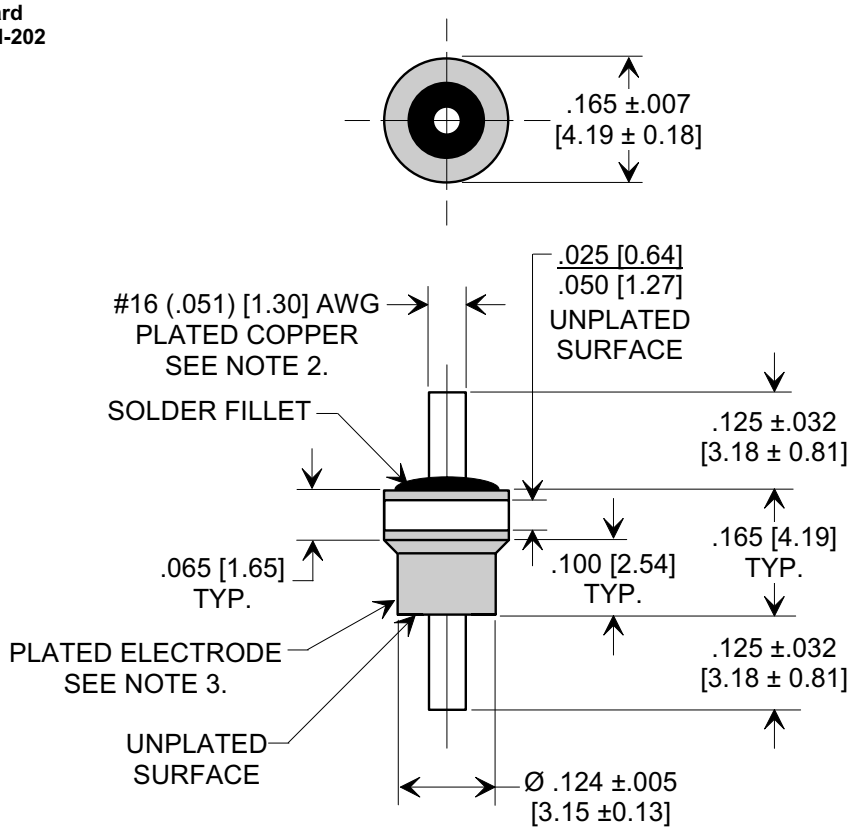

OPERATING INFORMATION	
STYLE NO.	2461-013
VALUE	800 pF
VALUE TOL.	GMV
TEMP. COEF.	X5V
RATING	200VDC @ +85°C
OPERATING RANGE	-55°C,+125°C
DWV	600
I.R. MIN @ 100VDC	10 GΩ
TO TUSONIX SPEC. UNLESS STATED OTHERWISE.	

NOTES:
1. TUSONIX STANDARD PART NUMBER: 2461-013-X5V0-801AA.
   TUSONIX RoHS COMPLIANT PART NUMBER:
   2461-013-X5V0-801AA. LF.
   CUSTOMER MUST SPECIFY STANDARD OR RoHS PART NUMBER WHEN ORDERING.
2. LEAD FINISH: STANDARD PART #: 60/40 SOLDER PLATED. RoHS PART #: SILVER PLATED.
3. ELECTRODE FINISH: STANDARD PART #: 60/40 SOLDER PLATED. RoHS PART #: MATTE TIN PLATED.
4. PART MARKING: STANDARD PART: NO MARKING. RoHS PART: MARKING ON PACKAGING ONLY.

X-2015 Rev-0

REVISION RECORD			
0	Original Release C.O. 20021112-1-08	DIM'S REVISED .025/.050 WAS .030/.050. L.E. 03-24-04	
1	20040324-3-04	REVISED DRW. TO MATCH CATALOG DWG. S.M. 10-04-04	
2	20040930-2-07	SOLDER PLATED WAS TIN. S.M. 06-20-05	
3	20050616-1-09	ADDED NOTES. S.M. 07-20-06	
4	20060614-1-09		

--TOLERANCES--
Unless Otherwise Specified

DECIMAL ± .015 [0.38]

ANGLES ±

TUSONIX
TUCSON, ARIZONA

Title
SHOULDER FEED-THRU

Drawn **S.M. 11-18-02**
Scale **4 X**
Approved **B.Mc. 11-18-02**

A **2461-013-X5V0-801AA**