MICRO SWITCH
a Honeywell Division
FED. MFG. CODE 91929

SWITCH - TOGGLE

CATALOG LISTING
31NT91 SERIES CHART 1

THIS DRAWING COVERS A PROPRIETARY ITEM AND IS THE PROPERTY OF MICRO SWITCH. A DIVISION OF HONEYWELL. THIS DRAWING IS NOT TO BE COPIED OR USED WITHOUT THE APPROVAL OF MICRO SWITCH

CATALOG LISTING	CIRCUIT MADE WITH TOGGLE LEVER IN △4			ELECTRICAL DATA
	KEYWAY SIDE (1-2)	CENTER (1-2)	OPPOSITE KEYWAY (2-3)	
31NT91-1	ON	OFF	ON	L191 15A 125, 250, 277 VAC 1/2HP 125 VAC 1HP 250, 277 VAC 5A 125 VAC "L"
31NT91-2	OFF	NONE	ON	
31NT91-3	ON	NONE	ON	
31NT91-21	NONE	OFF	ON	
31NT91-31	NONE	ON	ON	
Ⓒ	MOM OFF	NONE	ON	L192 10A 125, 250, 277 VAC 1/4HP 125 VAC, 1/2HP 250, 277 VAC 3A 125 VAC "L"
31NT91-5	MOM ON	OFF	ON	
31NT91-6	MOM ON	NONE	OFF	
31NT91-7	MOM ON	OFF	MOM ON	
31NT91-8	MOM ON	NONE	ON	
31NT91-51	NONE	ON	MOM ON	
31NT91-61	MOM ON	OFF	NONE	

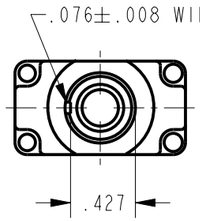

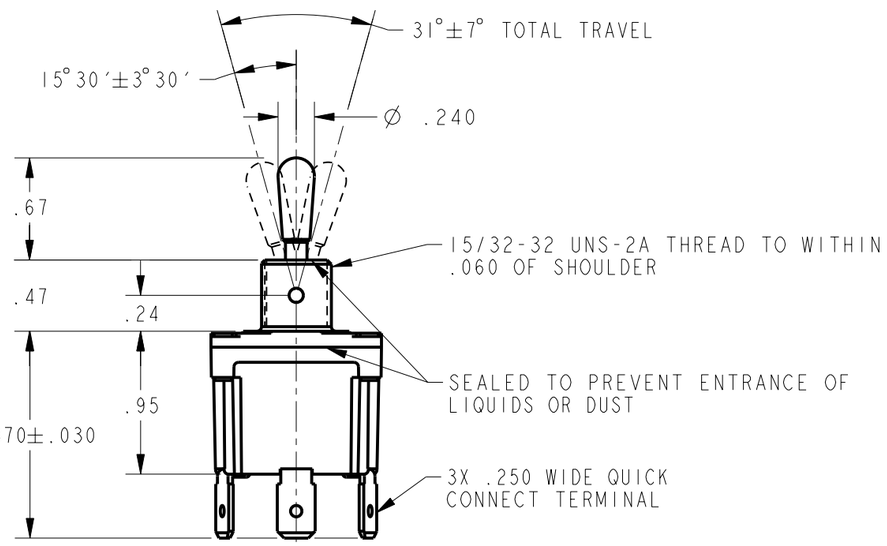

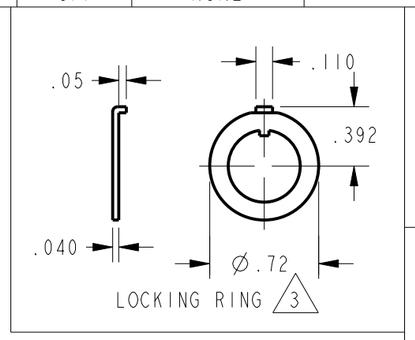

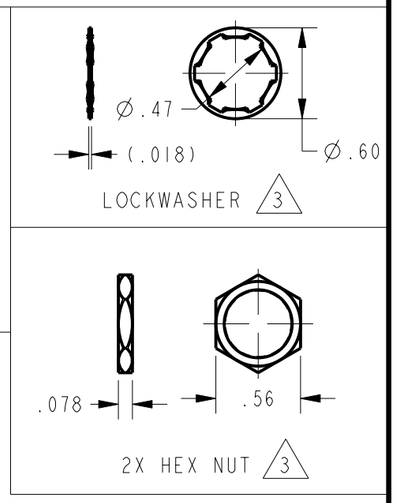

NOTES
1 - SWITCH WILL WITHSTAND TEMPERATURE OF 160°F CONTINUOUSLY AT FULL RATED LOAD
2 - MICRO SWITCH CAT. LIST. MARKED ON SIDE OF SWITCH
△3 FURNISHED UNASSEMBLED
△4 APPLIES ONLY TO "ON" AND "MOMENTARY ON" POSITIONS
5 - TO ORDER WITHOUT HARDWARE ADD (-NH) SUFFIX TO CATALOG LISTING

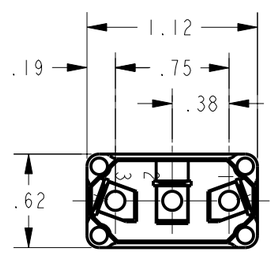

ANSI Y14.5M-1982 APPLIES

THIRD ANGLE PROJECTION

SCALE FULL

DO NOT SCALE PRINT

UNLESS OTHERWISE SPECIFIED TOLERANCES ARE

ONE PLACE	(.0)	±.030
TWO PLACE	(.00)	±.015
THREE PLACE	(.000)	±.005
ANGLES		±

WEIGHT .07 LB APPROX

CATALOG LISTING 31NT91 SERIES CHART 1
PAGE 1 OF 1
RELEASE NO. PR-20625
REPLACES -
ISSUE 6
CHECK
REVISIONS
A C094360 TSM 20NOV99
B 203335 GJW 20JUN01
C 203551 GJW 06AUG01
D 206707 TSM 7MAR03
E 207782 CSL 27 MAR 03
CHECK 29NOV99
SAV
CHECK 29NOV99
PTC/CAD 2D
DRAWN TSM 29NOV99