70475

OPTION D

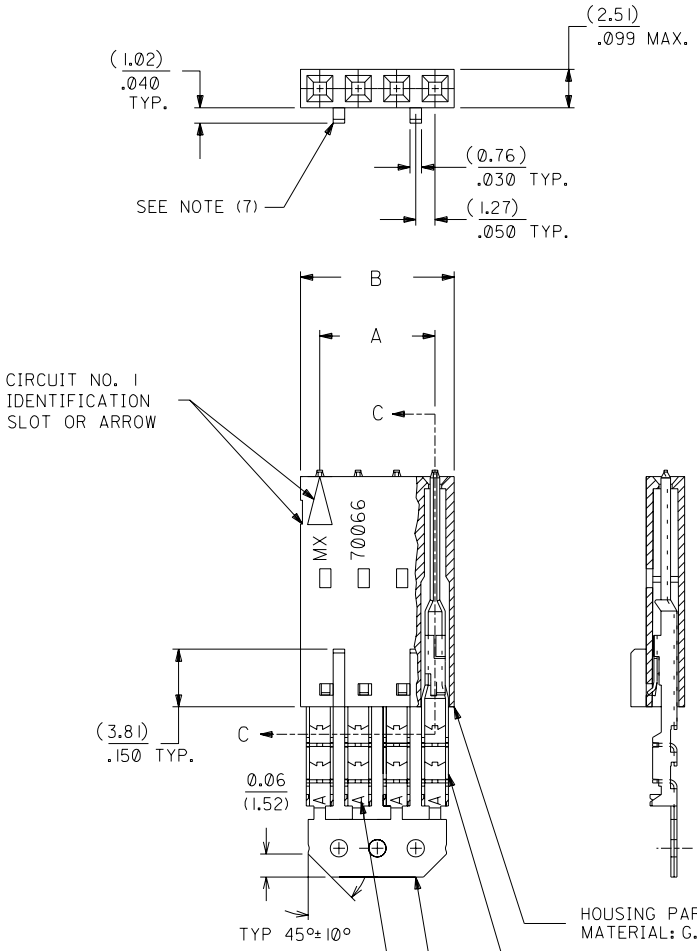

NOTES:

1) TO BE USED WITH (24) AWG. STRANDED WIRE WITH (1.35)/.053 DIA. MAX. INSULATION.
2) SEE CHART FOR CIRCUIT SIZES.
3) STANDARD PACKAGING PER PK-70873-0001. OPTIONAL PACKAGING MAY BE AVAILABLE, REQUEST DWG. PK-70475.
4) PARTS STACKABLE END TO END ON (2.54)/.100 CENTERS.
5) REFER TO PRODUCT SPECIFICATION: PS-70475.
6) SEE DWG. SDA-70475-**** (SHT.3) FOR OPTIONAL HOUSING DETAILS.
7) 4 CIRCUIT SHOWN. 3 - 25 CKT'S. HAVE (2) RIBS.
8) TO MATE WITH MOLEX PART NO'S.: 70018-****, 70022-****, 70104-****.
9) 2 CIRCUIT ASSEMBLIES SUPPLIED AS GROUPED PAIRS.

PRE-LOADED ASSEMBLY

SECTION C-C

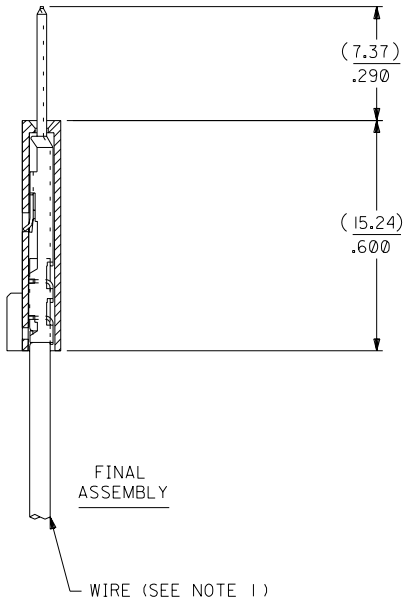

CKT. SIZE	A	B	EDP. NO.	ENG. NO.
2	(2.54) .100	(5.05) .199	14-44-2502	A-70475-1121
3	(5.08) .200	(7.59) .299	14-44-2503	A-70475-1122
4	(7.62) .300	(10.13) .399	14-44-2504	A-70475-1123
5	(10.16) .400	(12.67) .499	14-44-2505	A-70475-1124
6	(12.70) .500	(15.21) .599	14-44-2506	A-70475-1125
7	(15.24) .600	(17.75) .699	14-44-2507	A-70475-1126
8	(17.78) .700	(20.29) .799	14-44-2508	A-70475-1127
9	(20.32) .800	(22.83) .899	14-44-2509	A-70475-1128
10	(22.86) .900	(25.37) .999	14-44-2510	A-70475-1129
11	(25.54) 1.000	(27.91) 1.099	14-44-2511	A-70475-1130
12	(27.94) 1.100	(30.45) 1.199	14-44-2512	A-70475-1131
13	(30.48) 1.200	(32.99) 1.299	14-44-2513	A-70475-1132
14	(33.02) 1.300	(35.53) 1.399	14-44-2514	A-70475-1133
15	(35.56) 1.400	(38.07) 1.499	14-44-2515	A-70475-1134
16	(38.01) 1.500	(40.61) 1.599	14-44-2516	A-70475-1135
17	(40.64) 1.600	(43.15) 1.699	14-44-2517	A-70475-1136
18	(43.18) 1.700	(45.69) 1.799	14-44-2518	A-70475-1137
19	(45.72) 1.800	(48.23) 1.899	14-44-2519	A-70475-1138
20	(48.26) 1.900	(50.77) 1.999	14-44-2520	A-70475-1139
21	(50.80) 2.000	(53.31) 2.099	14-44-2521	A-70475-1140
22	(53.34) 2.100	(55.85) 2.199	14-44-2522	A-70475-1141
23	(55.88) 2.200	(58.39) 2.299	14-44-2523	A-70475-1142
24	(58.42) 2.300	(60.93) 2.399	14-44-2524	A-70475-1143
25	(60.96) 2.400	(63.47) 2.499	14-44-2525	A-70475-1144

70475

30 GOLD - .000030 MINIMUM GOLD IN SELECT AREA WITH .000075 MINIMUM TIN IN SELECT AREA OVER .000050 MINIMUM NICKEL OVER-ALL.

*THE PRIMARY SHIPPING CARTON WILL BE LABELED "COMPLIANT TO RoHS DIRECTIVE 2002/95/EC AND ELV ANNEX II OF DIRECTIVE 2000/53/EC". CARTONS WITHOUT THIS LABEL MAY CONTAIN PRODUCT WITH LEAD.

I.D. SLOT CODE TO WIRE GAUGE CHART	
I.D. SLOT CODE	WIRE GAUGE
A	24 AWG.

PLATING CODE (STRIPE ON CARRIER STRIP)	
PLATING	COLOR
30 GOLD	RED

LTR.	REVISIONS	LTR.	REVISIONS
		D	REVISED PER ECR NO. U82124 10-17-88 MGB
E	LEAD FREE UCP2004-1769 RWHITE 04/03/24	C	REVISE PER ECR #U81370 5/20/88 MJM
D1	ADD CARRIER CHAMF ECN #UDT1998-0280 05/20/98 LMCGRATH	B	REDRAWN ON CAD ECR# 8842 5/9/86 W.Z.

DIMENSIONS SHOWN (METRIC) INCH
UNLESS OTHERWISE SPECIFIED TOLERANCES: ANGULAR ± 1/2°

	INCH	METRIC
3 PLACE	± .010	---
2 PLACE	± .014	± 0.25
1 PLACE	---	± 0.35

DRAFT WHERE APPLICABLE MUST REMAIN WITHIN DIMENSIONS

DRWG. BY WAZ | CHK'D. BY WAZ | APP'D. BY RL | SCALE 4 : 1

MFG. | SH. | REV.

▽ = ▼ = REVISE ONLY ON CAD SYSTEM

TITLE
ASSEMBLY, SL CONNECTOR
(SINGLE ROW- (2.54)/.100 GRID)

molex MOLEX INCORPORATED
LISLE, ILL. 60532 U.S.A.

SHEET NO. 1 | DATE 10/13/84

PART NO. SEE CHART | DRWG. NO. SDA-70475-1121-1144

FILE NAME S70475DX7

THIS DRAWING CONTAINS INFORMATION THAT IS PROPRIETARY TO MOLEX INC. AND SHOULD NOT BE USED WITHOUT WRITTEN PERMISSION.

DIV. | SIZE C