TIGER ELECTRONIC CO.,LTD

Product specification

40A TRIACS

BTA/BTB41-800B

GENERAL DESCRIPTION

Available either in through-hole or surface-mount packages, the BTA/BTB41 - 600B triac series is suitable for general purpose AC switching. They can be used as an ON/OFF function in applications such as static relays, heating regulation, induction motor starting circuits... or for phase control operation in light dimmers, motor speed controllers, ...
The snubberless versions (BTA/BTB...W series) are specially recommended for use on inductive loads, thanks to their high commutation performances. By using an internal ceramic pad, the BTA series provides voltage insulated tab (rated at 2500V RMS) complying with UL standards.

ABSOLUTE MAXIMUM RATINGS (Ta = 25 °C)

PARAMETER	Symbol	Value	Unit
Repetitive peak off-state voltages	V_{DRM}	800	V
peak off-state reverse voltages	V_{RRM}	800	V
RMS on-state current	I_T	40.0	A
Non-repetitive peak on-state current	I_{TSM}	420	A
Max. Operating Junction Temperature	T_j	110	°C
Storage Temperature	T_{stg}	-45~150	°C

A1 A2 G

TO-3P

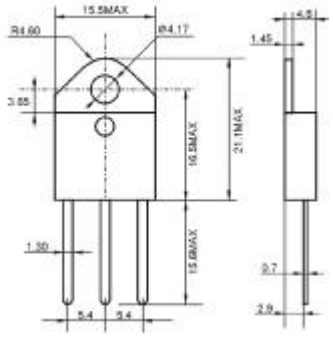

ELECTRICAL CHARACTERISTICS (Ta = 25 °C)

PARAMETER		Symbol	Test Conditions	Min.	Max	Unit
Repetitive peak off-state voltages		V_{DRM}	I_D=0.1mA	800	—	V
Repetitive peak off-state current		I_{DRM}	V_{DRM}=520V	—	10	uA
On-state voltage		V_{TM}	I_T=60A	—	1.55	V
Holding current		I_H	I_T=0.5A,I_{GT}=50mA	—	80	mA
Gate trigger Current	T2+G+	I_{GT}	V_{AK}=12V, R_L=30 Ω	—	50	mA
	T2+G-			—	50	
	T2-G-			—	50	
	T2-G+			—	100	
Gate trigger Voltage	T2+G+	V_{GT}	V_D=12V, R_L=30 Ω	—	1.3	V
	T2+G-			—	1.3	
	T2-G-				1.3	
	T2-G+			—	1.3	