Crystal Units
Surface Mount Type CX3225GA

KYOCERA

3.2×2.5mm for Automotive

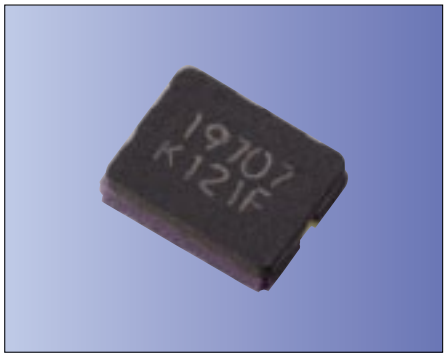

RoHS Compliant

Features

- Crystal unit for automotive electronics
- Small and low profile (3.2×2.5×0.85mm)
- Ceramic package
- Reflow compatible
- Acceptable heat cycle solder junction for 3000 cycle (–40 to +125°C)
- AEC-Q200 qualified

Applications

- ECU
- TPMS
- High-Speed Automotive Network (Flex Ray™ etc.)

How to Order

CX3225GA 16000 □□ □ □ □ □□
① ② ③ ④ ⑤ ⑥ ⑦

① Series
② Frequency
③ Load Capacitance

D0	8 pF	Std.

④ Frequency Stability

P	±50×10⁻⁶	Std.

⑤ Operating Temp. Range
⑥ Frequency Temp. Stability

TW	–40 to +150°C	±200×10⁻⁶	Std.

⑦ Individual Specification

Packaging (Tape & Reel 3000 pcs./ reel)

Specifications

Item	Symbol	Specification	Units	Remarks
Frequency Range	f_{nom}	9800 to 54000	kHz	
Overtone Order	OT	Fundamental	—	
Load Capacitance	CL	8	pF	
Frequency Stability	f_{tol}	±50	$\times 10^{-6}$	25°C±3°C
Motional Series Resistance	R1	Table 1	ohm	
Drive Level	DL	Table 2	µW	
Operating Temp. Range	T_{use}	–40 to +150	°C	
Storage Temp. Range	T_{stg}	–40 to +150	°C	
Frequency Temp. Characteristics	f_{tem}	±200	$\times 10^{-6}$	Freq. deviation from the value at 25°C

• Please contact us for other specifications.

Typical Frequencies and Part Numbers

Frequency (kHz)	Part Number
9843.750	CX3225GA09843D0PTWZ1
10000.000	CX3225GA10000D0PTWZ1
12000.000	CX3225GA12000D0PTWZ1
12800.000	CX3225GA12800D0PTWZ1
13560.000	CX3225GA13560D0PTWZ1
16000.000	CX3225GA16000D0PTWZ1
19200.000	CX3225GA19200D0PTWZ1
20000.000	CX3225GA20000D0PTWZ1
24000.000	CX3225GA24000D0PTWZ1
26000.000	CX3225GA26000D0PTWZ1
28636.360	CX3225GA28636D0PTWZ1
32000.000	CX3225GA32000D0PTWZ1
40000.000	CX3225GA40000D0PTWZ1

Table1 Motional Series Resistance

Frequency Range	Motional Series Resistance
9800 to 11999kHz	500Ω max.
12000 to 13999kHz	300Ω max.
14000 to 15999kHz	200Ω max.
16000 to 19999kHz	100Ω max.
20000 to 26999kHz	100Ω max.
27000 to 54000kHz	100Ω max.

Table2 Level of Drive

Frequency Range	Level of Drive
9800 to 54000kHz	10µW (200µW max.)

Dimensions

(Unit: mm)

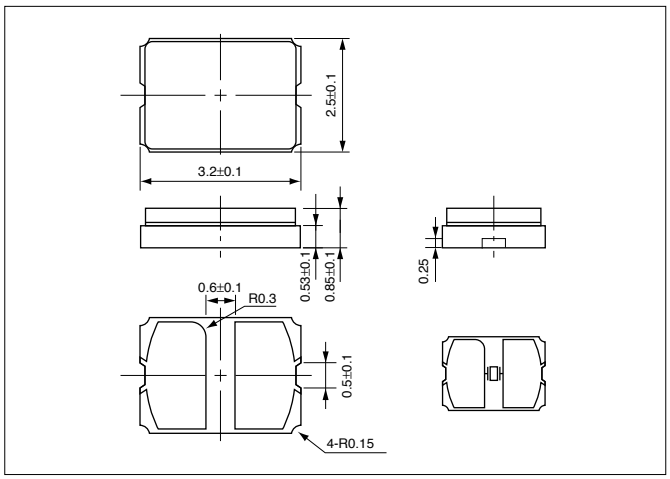

Recommended Land Pattern

(Unit: mm)

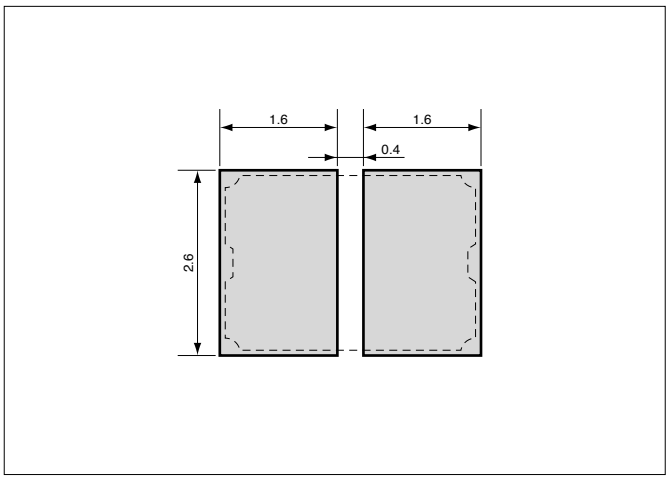

Crystal Units
Surface Mount Type CX3225CA

KYOCERA

3.2×2.5mm for Automotive

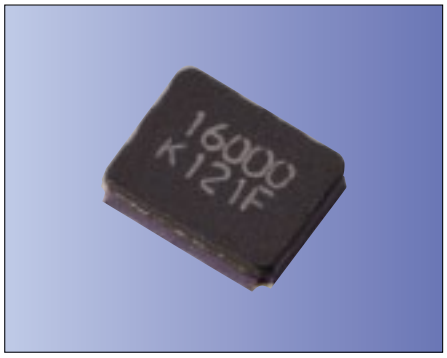

RoHS Compliant

Features

- Crystal unit for automotive electronics
- Small and low profile (3.2×2.5×0.80mm)
- Ceramic package
- Reflow compatible
- AEC-Q200 qualified

Applications

- ECU
- TPMS
- High-Speed Automotive Network (Flex Ray™ etc.)

How to Order

CX3225CA 16000 □□ □ □ □ □□

① ② ③ ④ ⑤ ⑥ ⑦

① Series ② Frequency

③ Load Capacitance ④ Frequency Stability

D0	8 pF	Std.	P	±50×10⁻⁶	Std.

⑤ Operating Temp. Range ⑥ Frequency Temp. Stability

SW	−40 to +125°C	±200×10⁻⁶	Std.

⑦ Individual Specification

Packaging (Tape & Reel 3000 pcs./ reel)

Specifications

Item	Symbol	Specification	Units	Remarks
Frequency Range	f_{nom}	9800 to 54000	kHz	
Overtone Order	OT	Fundamental	—	
Load Capacitance	CL	8	pF	
Frequency Stability	f_{tol}	±50	$\times 10^{-6}$	25°C±3°C
Motional Series Resistance	R1	Table 1	ohm	
Drive Level	DL	Table 2	µW	
Operating Temp. Range	T_{use}	−40 to +125	°C	
Storage Temp. Range	T_{stg}	−40 to +150	°C	
Frequency Temp. Characteristics	f_{tem}	±200	$\times 10^{-6}$	Freq. deviation from the value at 25°C

• Please contact us for other specifications.

Typical Frequencies and Part Numbers

Frequency (kHz)	Part Number
9843.750	CX3225CA09843D0PSWZ1
10000.000	CX3225CA10000D0PSWZ1
12000.000	CX3225CA12000D0PSWZ1
12800.000	CX3225CA12800D0PSWZ1
13560.000	CX3225CA13560D0PSWZ1
16000.000	CX3225CA16000D0PSWZ1
19200.000	CX3225CA19200D0PSWZ1
20000.000	CX3225CA20000D0PSWZ1
24000.000	CX3225CA24000D0PSWZ1
26000.000	CX3225CA26000D0PSWZ1
28636.360	CX3225CA28636D0PSWZ1
32000.000	CX3225CA32000D0PSWZ1
40000.000	CX3225CA40000D0PSWZ1

Table1 Motional Series Resistance

Frequency Range	Motional Series Resistance
9800 to 11999kHz	500Ω max.
12000 to 13999kHz	300Ω max.
14000 to 15999kHz	200Ω max.
16000 to 19999kHz	100Ω max.
20000 to 26999kHz	100Ω max.
27000 to 54000kHz	100Ω max.

Table2 Level of Drive

Frequency Range	Level of Drive
9800 to 54000kHz	10µW (200µW max.)

Dimensions

(Unit: mm)

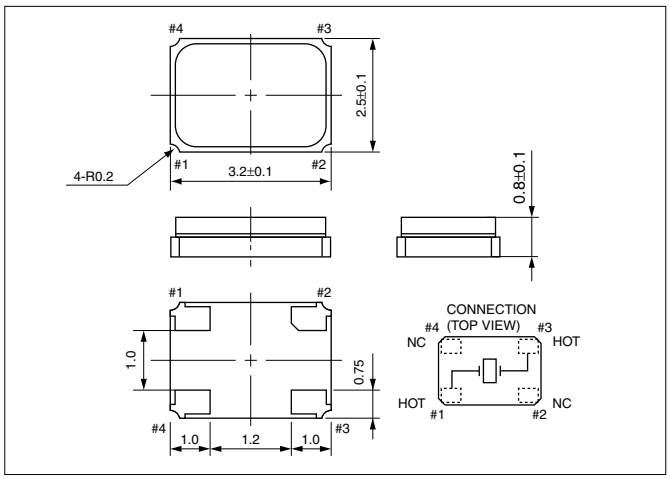

Recommended Land Pattern

(Unit: mm)

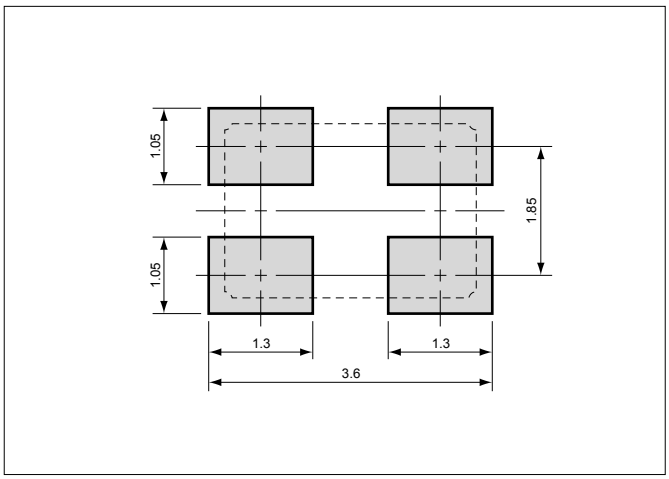

Crystal Units
Surface Mount Type CX3225SA

KYOCERA

3.2×2.5mm for Automotive

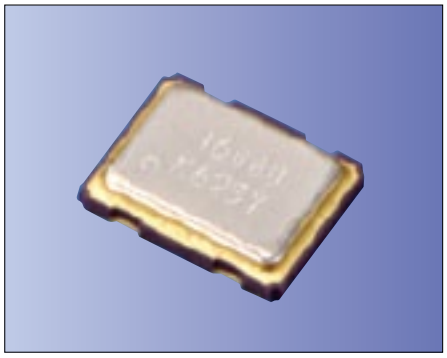

RoHS Compliant

Features

- Crystal unit for automotive electronics
- Improved solderability
- Improved mounting stability with 4 terminals
- Improved anti-noise performance with GND terminal
- Using ceramic package resulting in high reliability
- Small and low profile
- Improved rust prevention performance
- Reflow compatible
- Highly reliable solder junction (3000 heat cycles –40 to +125°C)
- AEC-Q200 qualified

Applications

- ECU
- TPMS
- High-Speed Automotive Network (Flex Ray™ etc.)

How to Order

CX3225SA 12000 □□ □ □ □ □□

① ② ③ ④ ⑤ ⑥ ⑦

① Series
② Frequency
③ Load Capacitance

D0	8 pF	Std.
F0	10 pF	—

④ Frequency Stability

K	$\pm30\times10^{-6}$	—
P	$\pm50\times10^{-6}$	Std.
Q	$\pm100\times10^{-6}$	—

⑤ Operating Temp. Range ⑥ Frequency Temp. Stability

SV	–40 to +125°C	$\pm150\times10^{-6}$	—
TW	–40 to +150°C	$\pm200\times10^{-6}$	Std.

⑦ Individual Specification

Packaging (Tape & Reel 3000/ 1000 pcs./ reel)

Specifications

Item	Symbol	Specification	Units	Remarks
Frequency Range	f_{nom}	8000 to 54000	kHz	
Overtone Order	OT	Fundamental	—	
Load Capacitance	CL	8	pF	
Frequency Stability	f_{tol}	±50	$\times10^{-6}$	25°C±3°C
Motional Series Resistance	R1	Table 1	ohm	
Drive Level	DL	Table 2	µW	
Operating Temp. Range	T_{use}	–40 to +150	°C	
Storage Temp. Range	T_{stg}	–40 to +150	°C	
Frequency Temp. Characteristics	f_{tem}	±200	$\times10^{-6}$	Freq. deviation from the value at 25°C

• Please contact us for other specifications.

Typical Frequencies and Part Numbers

Frequency (kHz)	Part Number
9843.750	CX3225SA09843D0PTWZ1
10000.000	CX3225SA10000D0PTWZ1
12000.000	CX3225SA12000D0PTWZ1
12800.000	CX3225SA12800D0PTWZ1
13560.000	CX3225SA13560D0PTWZ1
16000.000	CX3225SA16000D0PTWZ1
19200.000	CX3225SA19200D0PTWZ1
20000.000	CX3225SA20000D0PTWZ1
24000.000	CX3225SA24000D0PTWZ1
26000.000	CX3225SA26000D0PTWZ1
28636.360	CX3225SA28636D0PTWZ1
32000.000	CX3225SA32000D0PTWZ1
40000.000	CX3225SA40000D0PTWZ1

Table1 Motional Series Resistance

Frequency Range	Motional Series Resistance
8000 to 9799kHz	500Ω max.
9800 to 14999kHz	200Ω max.
15000 to 15999kHz	100Ω max.
16000 to 19999kHz	60Ω max.
20000 to 54000kHz	50Ω max.

Table2 Level of Drive

Frequency Range	Level of Drive
8000 to 54000kHz	10µW (200µW max.)

Dimensions

(Unit: mm)

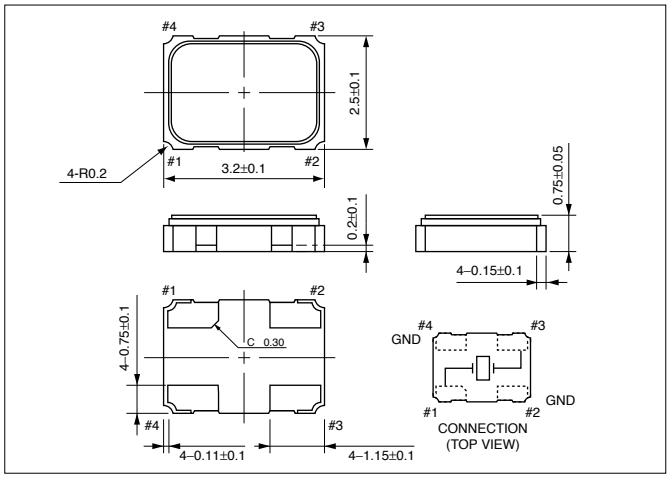

Recommended Land Pattern

(Unit: mm)

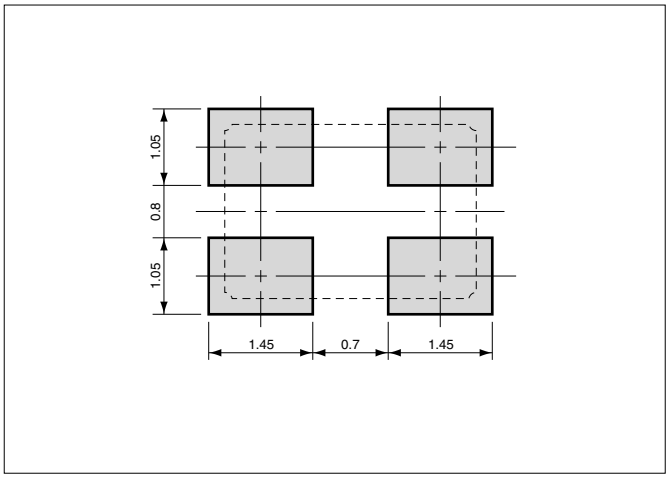

Crystal Units
Surface Mount Type CX5032SA

KYOCERA

5.0×3.2mm for Automotive

RoHS Compliant

Features

- Crystal unit for automotive electronics
- Improved solderability
- Using ceramic package resulting in high reliability
- Small and low profile
- Improved rust prevention performance
- Reflow compatible
- AEC-Q200 qualified

Applications

- ECU
- TPMS
- High-Speed Automotive Network (Flex Ray™ etc.)

How to Order

CX5032SA 08000 □□ □ □ □ □□

① ② ③ ④ ⑤ ⑥ ⑦

① Series
② Frequency
③ Load Capacitance

D0	8 pF	—
F0	10 pF	—
H0	12 pF	Std.

④ Frequency Stability

P	$\pm50\times10^{-6}$	Std.
Q	$\pm100\times10^{-6}$	—

⑤ Operating Temp. Range
⑥ Frequency Temp. Stability

SV	−40 to +125°C	$\pm150\times10^{-6}$	—
TW	−40 to +150°C	$\pm200\times10^{-6}$	Std.

⑦ Individual Specification

Packaging (Tape & Reel 5000/ 1000 pcs./ reel)

Specifications

Item	Symbol	Specification	Units	Remarks
Frequency Range	f_{nom}	8000 to 40000	kHz	
Overtone Order	OT	Fundamental	—	
Load Capacitance	CL	12	pF	
Frequency Stability	f_{tol}	±50	$\times10^{-6}$	25°C±3°C
Motional Series Resistance	R1	Table 1	ohm	
Drive Level	DL	Table 2	µW	
Operating Temp. Range	T_{use}	−40 to +150	°C	
Storage Temp. Range	T_{stg}	−40 to +150	°C	
Frequency Temp. Characteristics	f_{tem}	±200	$\times10^{-6}$	Freq. deviation from the value at 25°C

• Please contact us for other specifications.

Typical Frequencies and Part Numbers

Frequency (kHz)	Part Number
8000.000	CX5032SA08000H0PTWZ1
9843.750	CX5032SA09843H0PTWZ1
10000.000	CX5032SA10000H0PTWZ1
12000.000	CX5032SA12000H0PTWZ1
13560.000	CX5032SA13560H0PTWZ1
15000.000	CX5032SA15000H0PTWZ1
16000.000	CX5032SA16000H0PTWZ1
18000.000	CX5032SA18000H0PTWZ1
20000.000	CX5032SA20000H0PTWZ1
24000.000	CX5032SA24000H0PTWZ1
25000.000	CX5032SA25000H0PTWZ1

Table1 Motional Series Resistance

Frequency Range	Motional Series Resistance
8000 to 8999kHz	200Ω max.
9000 to 11999kHz	150Ω max.
12000 to 19999kHz	100Ω max.
20000 to 40000kHz	50Ω max.

Table2 Level of Drive

Frequency Range	Level of Drive
8000 to 40000kHz	10µW (100µW max.)

Dimensions

(Unit: mm)

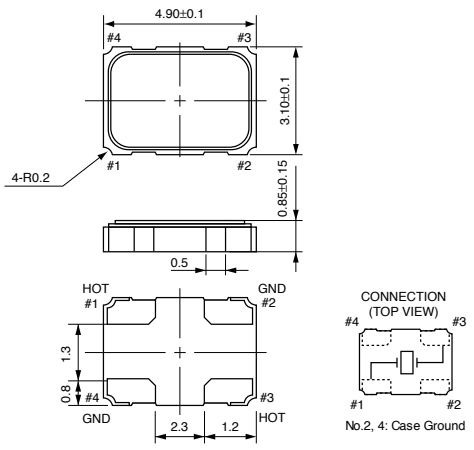

Recommended Land Pattern

(Unit: mm)

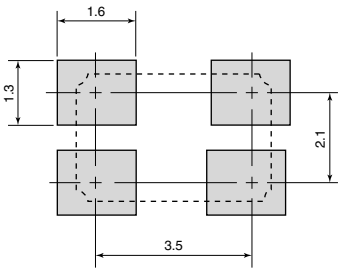

Crystal Units
Surface Mount Type CX5032GA (CX-53G)

KYOCERA

5.0×3.2mm for Automotive

RoHS Compliant

Features

- Crystal unit for automotive electronics
- Small and low profile (5.0×3.2×1.3mm)
- Ceramic package
- Reflow compatible
- AEC-Q200 qualified

Applications

- ECU

How to Order

CX5032GA 08000 □□ □ □ □ □□

① ② ③ ④ ⑤ ⑥ ⑦

① Series
② Frequency
③ Load Capacitance
④ Frequency Stability

D0	8 pF	—
H0	12 pF	Std.

P	$\pm50\times10^{-6}$	—
Q	$\pm100\times10^{-6}$	Std.

⑤ Operating Temp. Range ⑥ Frequency Temp. Stability

TW	−40 to +150°C	$\pm200\times10^{-6}$	Std.

⑦ Individual Specification

Packaging (Tape & Reel 3000/ 1000 pcs./ reel)

Specifications

Item	Symbol	Specification	Units	Remarks
Frequency Range	f_{nom}	8000 to 40000	kHz	
Overtone Order	OT	Fundamental	—	
Load Capacitance	CL	12	pF	
Frequency Stability	f_{tol}	±100	$\times10^{-6}$	25°C±3°C
Motional Series Resistance	R1	Table 1	ohm	
Drive Level	DL	Table 2	µW	
Operating Temp. Range	T_{use}	−40 to +150	°C	
Storage Temp. Range	T_{stg}	−40 to +150	°C	
Frequency Temp. Characteristics	f_{tem}	±200	$\times10^{-6}$	Freq. deviation from the value at 25°C

• Please contact us for other specifications.

Typical Frequencies and Part Numbers

Frequency (kHz)	Part Number
8000.000	CX5032GA08000H0QTWZ1
9843.750	CX5032GA09843H0QTWZ1
10000.000	CX5032GA10000H0QTWZ1
12000.000	CX5032GA12000H0QTWZ1
13560.000	CX5032GA13560H0QTWZ1
15000.000	CX5032GA15000H0QTWZ1
16000.000	CX5032GA16000H0QTWZ1
18000.000	CX5032GA18000H0QTWZ1
20000.000	CX5032GA20000H0QTWZ1
24000.000	CX5032GA24000H0QTWZ1
25000.000	CX5032GA25000H0QTWZ1

Table1 Motional Series Resistance

Frequency Range	Motional Series Resistance
8000 to 9499kHz	300Ω max.
9500 to 9999kHz	200Ω max.
10000 to 13999kHz	150Ω max.
14000 to 19999kHz	100Ω max.
20000 to 29999kHz	70Ω max.
30000 to 40000kHz	50Ω max.

Table2 Level of Drive

Frequency Range	Level of Drive
8000 to 15999kHz	10µW (500µW max.)
16000 to 24999kHz	10µW (300µW max.)
25000 to 40000kHz	10µW (100µW max.)

Dimensions

(Unit: mm)

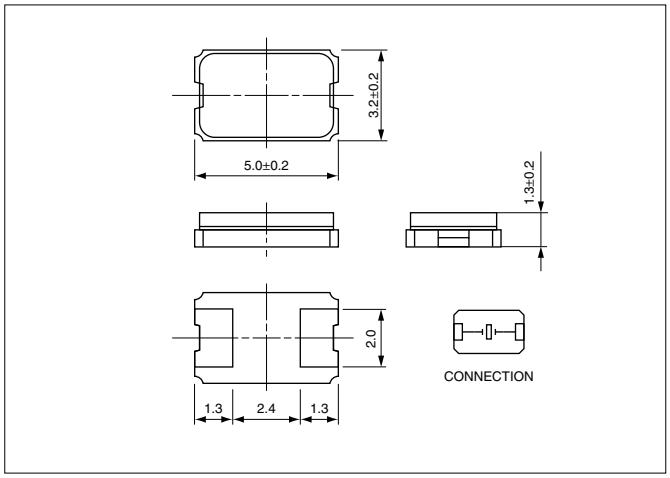

Recommended Land Pattern

(Unit: mm)

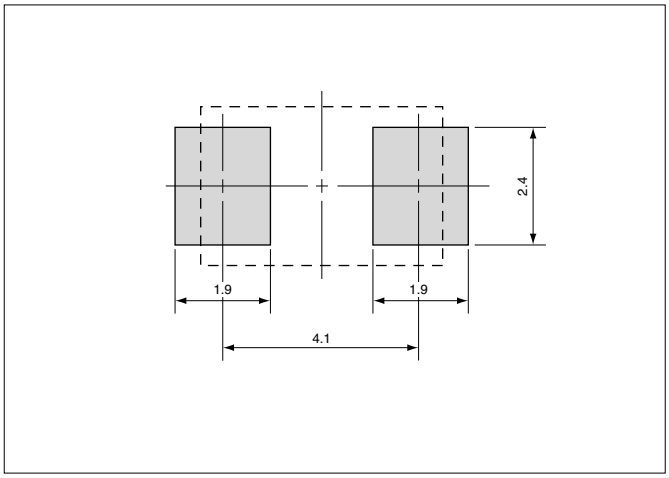

Crystal Units
Surface Mount Type CX8045JA (CX-17F)

KYOCERA

8.0×4.5mm for Automotive

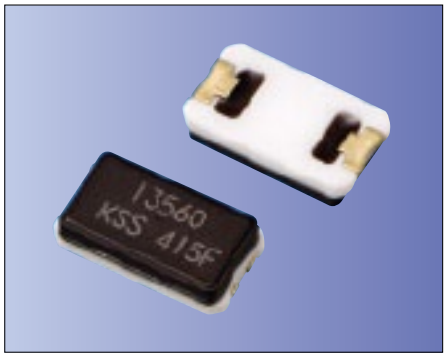

RoHS Compliant

Features

- Crystal unit for automotive electronics
- Small and low profile (8.0×4.5×1.9mm)
- Ceramic package, J lead type
- Reflow compatible
- AEC-Q200 qualified

Applications

- ECU, TPMS

How to Order

CX8045JA 08000 □□ □ □ □ □□
① ② ③ ④ ⑤ ⑥ ⑦

① Series
② Frequency
③ Load Capacitance

D0	8 pF	—
H0	12 pF	Std.

④ Frequency Stability

P	±50×10⁻⁶	—
Q	±100×10⁻⁶	Std.

⑤ Operating Temp. Range ⑥ Frequency Temp. Stability

TW	−40 to +150°C	±200×10⁻⁶	Std.

⑦ Individual Specification

Packaging (Tape & Reel 3000/ 1000 pcs./ reel)

Specifications

Item	Symbol	Specification	Units	Remarks
Frequency Range	f_{nom}	4000 to 30000	kHz	
Overtone Order	OT	Fundamental	—	
Load Capacitance	CL	12	pF	
Frequency Stability	f_{tol}	±100	$\times 10^{-6}$	25°C±3°C
Motional Series Resistance	R1	Table 1	ohm	
Drive Level	DL	Table 2	µW	
Operating Temp. Range	T_{use}	−40 to +150	°C	
Storage Temp. Range	T_{stg}	−40 to +150	°C	
Frequency Temp. Characteristics	f_{tem}	±200	$\times 10^{-6}$	Freq. deviation from the value at 25°C

• Please contact us for other specifications.

Typical Frequencies and Part Numbers

Frequency (kHz)	Part Number
8000.000	CX8045JA08000H0QTWZ1
9843.750	CX8045JA09843H0QTWZ1
10000.000	CX8045JA10000H0QTWZ1
12000.000	CX8045JA12000H0QTWZ1
13560.000	CX8045JA13560H0QTWZ1
14000.000	CX8045JA14000H0QTWZ1
16000.000	CX8045JA16000H0QTWZ1
18000.000	CX8045JA18000H0QTWZ1
20000.000	CX8045JA20000H0QTWZ1
24000.000	CX8045JA24000H0QTWZ1
25000.000	CX8045JA25000H0QTWZ1
30000.000	CX8045JA30000H0QTWZ1

Table1 Motional Series Resistance

Frequency Range	Motional Series Resistance
4000 to 4999kHz	500Ω max.
5000 to 7199kHz	300Ω max.
7200 to 9999kHz	200Ω max.
10000 to 11999kHz	150Ω max.
12000 to 30000kHz	100Ω max.

Table2 Level of Drive

Frequency Range	Level of Drive
4000 to 15999kHz	10µW (500µW max.)
16000 to 24999kHz	10µW (300µW max.)
25000 to 30000kHz	10µW (100µW max.)

Dimensions

(Unit: mm)

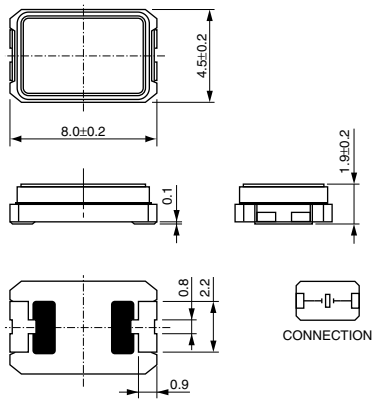

Recommended Land Pattern

(Unit: mm)

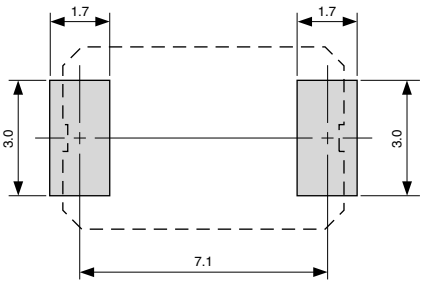

Crystal Units
Surface Mount Type CX8045GA

KYOCERA

8.0×4.5mm for Automotive

RoHS Compliant

Features

- Crystal unit for automotive electronics
- Small and low profile (8.0×4.5×1.8mm)
- Ceramic package
- Reflow compatible
- AEC-Q200 qualified

Applications

- ECU

How to Order

CX8045GA 08000 □□ □ □ □ □□

① ② ③ ④ ⑤ ⑥ ⑦

① Series ② Frequency

③ Load Capacitance ④ Frequency Stability

D0	8 pF	—	P	$\pm50\times10^{-6}$	—
H0	12 pF	Std.	Q	$\pm100\times10^{-6}$	Std.

⑤ Operating Temp. Range ⑥ Frequency Temp. Stability

TW	−40 to +150°C	$\pm200\times10^{-6}$	Std.

⑦ Individual Specification

Packaging (Tape & Reel 3000/ 1000 pcs./ reel)

Specifications

Item	Symbol	Specification	Units	Remarks
Frequency Range	f_{nom}	4000 to 30000	kHz	
Overtone Order	OT	Fundamental	—	
Load Capacitance	CL	12	pF	
Frequency Stability	f_{tol}	±100	$\times10^{-6}$	25°C±3°C
Motional Series Resistance	R1	Table 1	ohm	
Drive Level	DL	Table 2	µW	
Operating Temp. Range	T_{use}	−40 to +150	°C	
Storage Temp. Range	T_{stg}	−40 to +150	°C	
Frequency Temp. Characteristics	f_{tem}	±200	$\times10^{-6}$	Freq. deviation from the value at 25°C

• Please contact us for other specifications.

Typical Frequencies and Part Numbers

Frequency (kHz)	Part Number
8000.000	CX8045GA08000H0QTWZ1
9843.750	CX8045GA09843H0QTWZ1
10000.000	CX8045GA10000H0QTWZ1
12000.000	CX8045GA12000H0QTWZ1
13560.000	CX8045GA13560H0QTWZ1
14000.000	CX8045GA14000H0QTWZ1
16000.000	CX8045GA16000H0QTWZ1
18000.000	CX8045GA18000H0QTWZ1
20000.000	CX8045GA20000H0QTWZ1
24000.000	CX8045GA24000H0QTWZ1
25000.000	CX8045GA25000H0QTWZ1
30000.000	CX8045GA30000H0QTWZ1

Table1 Motional Series Resistance

Frequency Range	Motional Series Resistance
4000 to 7199kHz	300Ω max.
7200 to 9999kHz	200Ω max.
10000 to 11999kHz	150Ω max.
12000 to 30000kHz	100Ω max.

Table2 Level of Drive

Frequency Range	Level of Drive
4000 to 15999kHz	10µW (500µW max.)
16000 to 24999kHz	10µW (300µW max.)
25000 to 30000kHz	10µW (100µW max.)

Dimensions

(Unit: mm)

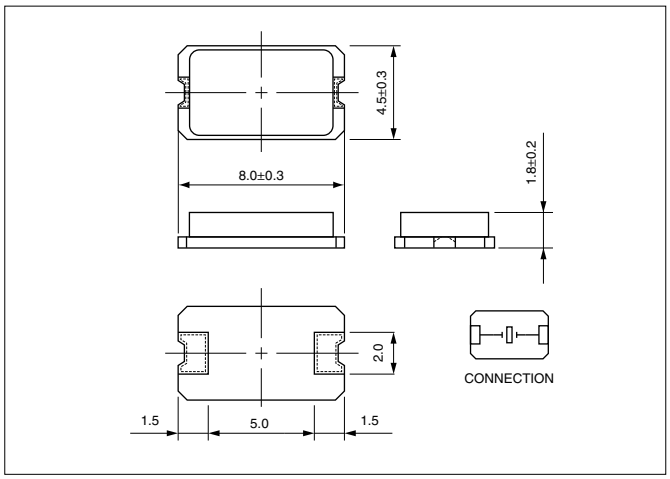

Recommended Land Pattern

(Unit: mm)

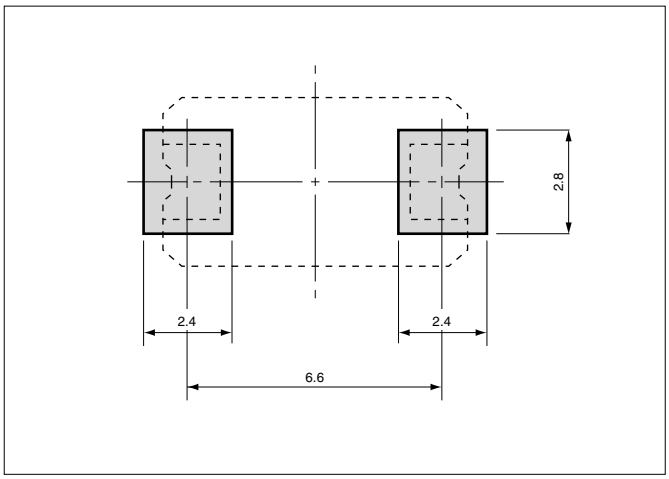

Crystal Units
Surface Mount Type CX1255CA

KYOCERA

11.8×5.5mm for Automotive

RoHS Compliant

Features

- Crystal unit for automotive electronics
- Small and low profile (11.8×5.5×2.5mm)
- Ceramic package
- Reflow compatible
- AEC-Q200 qualified

Applications

- ECU

How to Order

CX1255CA 04000 □□ □ □ □ □□
① ② ③ ④ ⑤ ⑥ ⑦

① Series
② Frequency
③ Load Capacitance ④ Frequency Stability

D0	8 pF	—	P	$\pm50\times10^{-6}$	—
H0	12 pF	Std.	Q	$\pm100\times10^{-6}$	Std.

⑤Operating Temp. Range ⑥Frequency Temp. Stability

TW	−40 to +150°C	$\pm200\times10^{-6}$	Std.

⑦ Individual Specification

Specifications

Item	Symbol	Specification	Units	Remarks
Frequency Range	f_{nom}	3500 to 20000	kHz	
Overtone Order	OT	Fundamental	—	
Load Capacitance	CL	12	pF	
Frequency Stability	f_{tol}	±100	$\times10^{-6}$	25°C±3°C
Motional Series Resistance	R1	Table 1	ohm	
Drive Level	DL	Table 2	μW	
Operating Temp. Range	T_{use}	−40 to +150	°C	
Storage Temp. Range	T_{stg}	−40 to +150	°C	
Frequency Temp. Characteristics	f_{tem}	±200	$\times10^{-6}$	Freq. deviation from the value at 25°C

• Please contact us for other specifications.

Typical Frequencies and Part Numbers

Frequency (kHz)	Part Number
4000.000	CX1255CA04000H0QTWZ1
5000.000	CX1255CA05000H0QTWZ1
6000.000	CX1255CA06000H0QTWZ1
8000.000	CX1255CA08000H0QTWZ1
10000.000	CX1255CA10000H0QTWZ1
12000.000	CX1255CA12000H0QTWZ1
16000.000	CX1255CA16000H0QTWZ1
18000.000	CX1255CA18000H0QTWZ1
20000.000	CX1255CA20000H0QTWZ1

Table1 Motional Series Resistance

Frequency Range	Motional Series Resistance
3500 to 3999kHz	200Ω max.
4000 to 7999kHz	180Ω max.
8000 to 11999kHz	120Ω max.
12000 to 20000kHz	80Ω max.

Table2 Level of Drive

Frequency Range	Level of Drive
3500 to 15999kHz	10μW (500μW max.)
16000 to 20000kHz	10μW (300μW max.)

Dimensions

(Unit: mm)

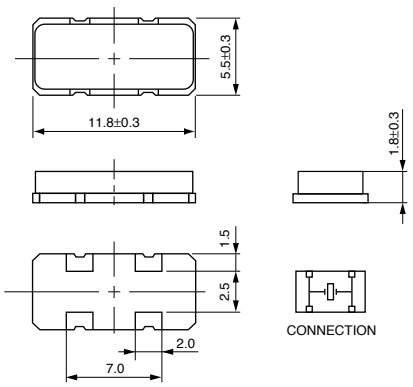

Recommended Land Pattern
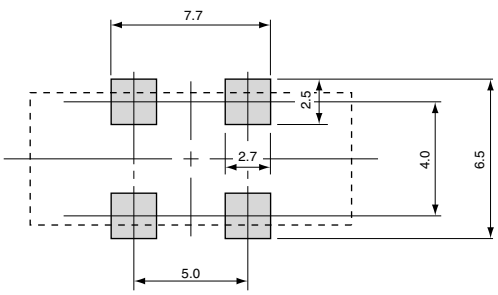
(Unit: mm)