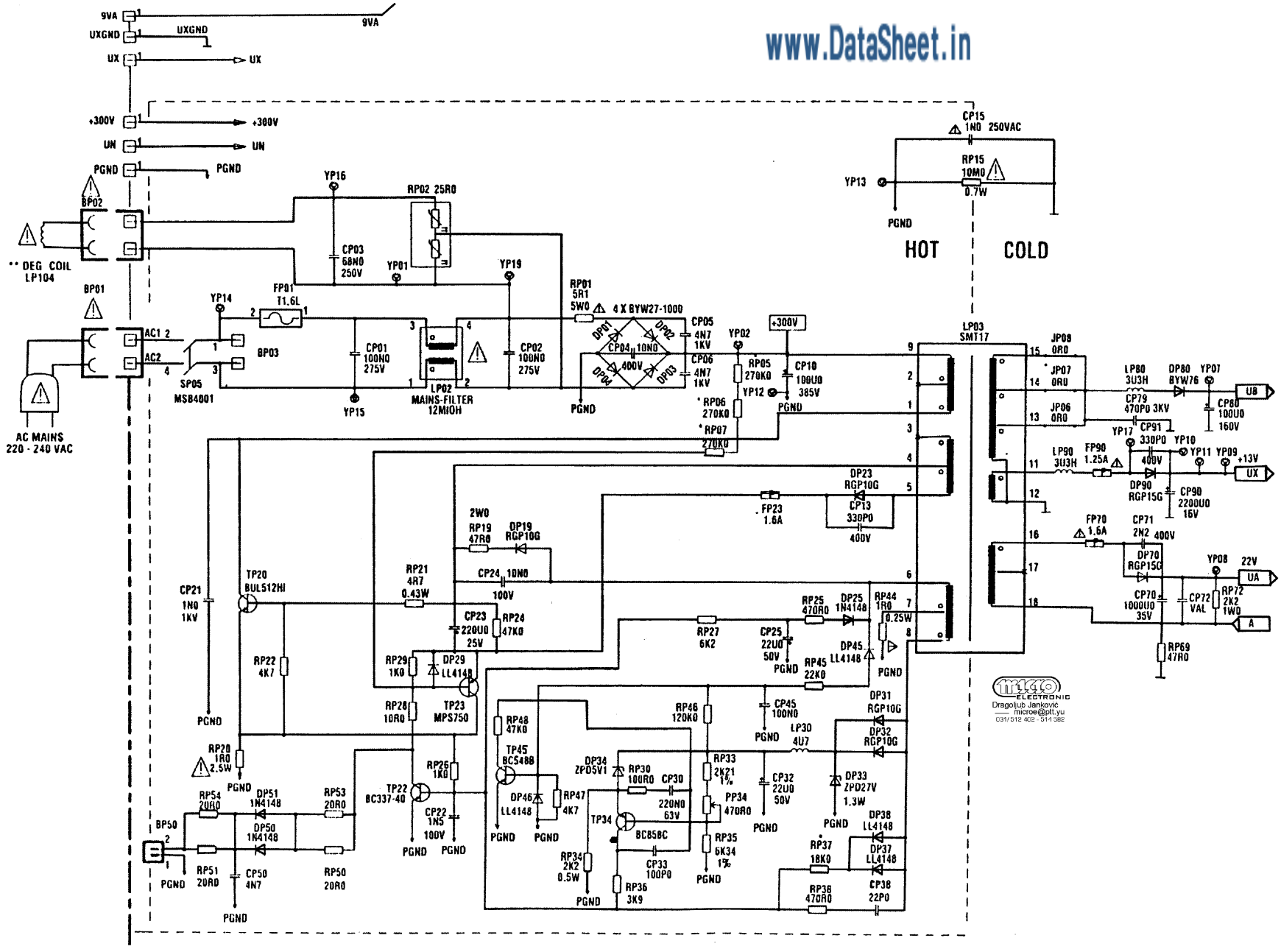www.DataSheet.in