REV	DESCRIPTION	BY DATE	APPD
A	REVISED DRAWING PER EWR07-2997/ER7149	RAF 03/13/08	WPM

NOTES: UNLESS OTHERWISE SPECIFIED

1. FOR INTERFACE SPECIFICATIONS SEE ANSI/SCTE 02 2006.
2. MATERIAL SPECIFICATIONS:
   BODY, CONTACT: BRASS PER ASTM B16
   INSULATORS: TEFLON PER D1710
   CENTER CONTACT AND FERRULE: COPPER ALLOY
3. FINISH SPECIFICATIONS:
   BODY AND FERRULE: .000100 MIN Nickel Per AMS-QQ-N-290 over Copper Flash Per ASTM B734 (RoHS)
   CONTACT: .000030 MIN Gold Per ASTM B488 over .000080 MIN Nickel Per AMS-QQN-290 (RoHS)
4. REAR CONTACT AND FERRULE SHIPPED LOOSE.
5. CRIMP FERRULE USING CRIMP TOOL KTH-5000 AND CRIMP DIE KTH-5001(.128 HEX DIE).
6. FOR USE WITH RG-179 OR EQUIVALENT CABLE.
7. CAP 9-11 FOR CABLE ASSEMBLY PROCEDURE.

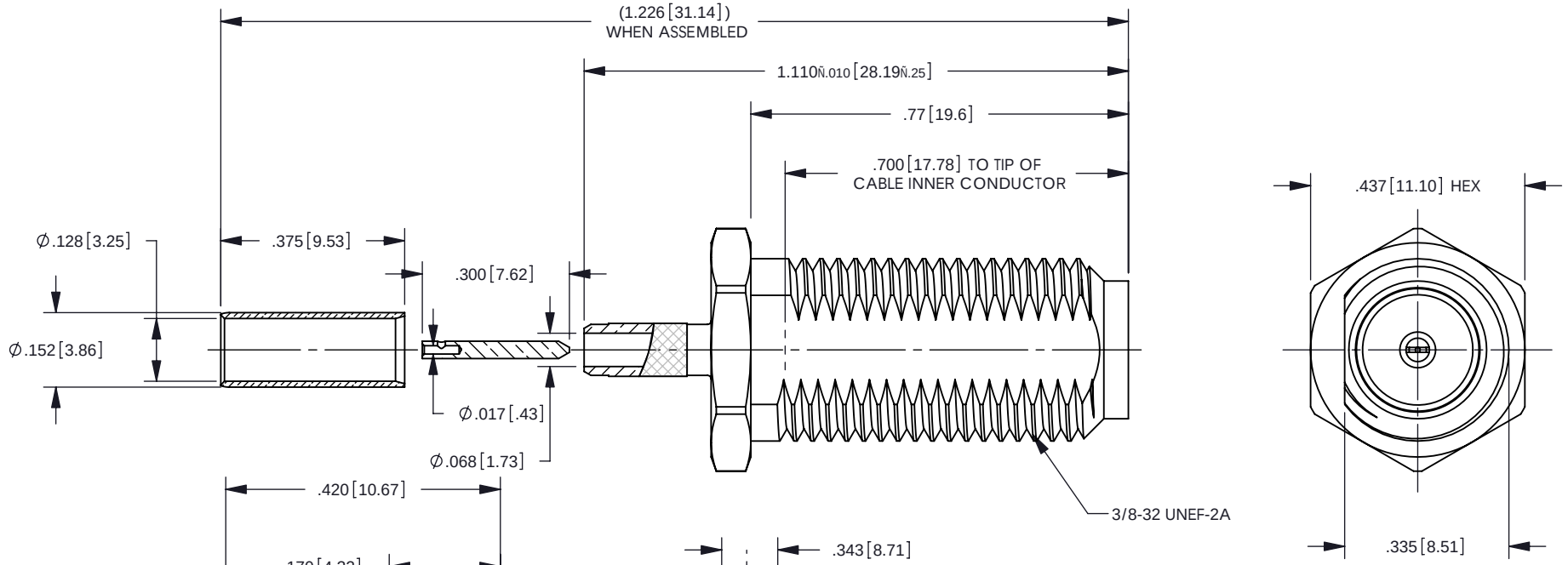

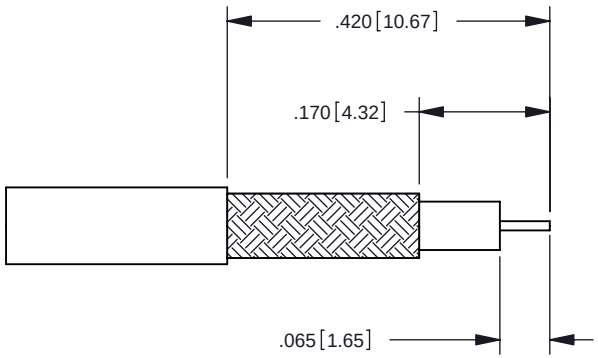

RECOMMENDED CABLE TRIM DIMENSIONS

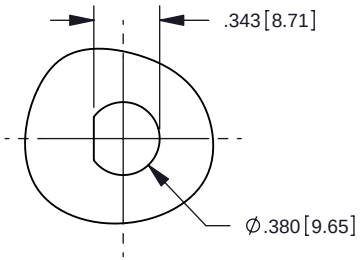

RECOMMENDED MOUNTING HOLE

CATALOG P/N: **061-929-0634N**

PER ASME Y14.5M-1994
UNLESS OTHERWISE SPECIFIED:
DIMENSIONS ARE IN INCHES [MM]
TOLERANCES:
DECIMAL: .XX [X.X] Ñ .01 [0.3]
.XXX [X.XX] Ñ .005 [0.13]
.XXXX [X.XXX] Ñ .XXXX
ANGLES: Ñ 2Á ê SCALE: 2:1

CUSTOMER DRAWING

DRAWN	DATE	APPROVED	DATE
CWB	05/01/07	JC	06/01/07é
APPROVED	DATE	APPROVED	DATE
RF	05/01/07	WPM	06/01/07é

WinchesterElectronics
Winchester Electronics Corporation
62 Barnes Industrial Road North
Wallingford, Connecticut 06492

TYPE F BULK HEAD JACK
WITHOUT MOUNTING HARDWARE
(RoHS COMPLIANT)

A	SD061-929-0634N	SHT 1 OF 1	REV A