High Resolution 16- and 18-Bit Digital-to-Analog Converters

DAC1136/1138

FEATURES

DAC1138
- 18-Bit Resolution and Accuracy (38μV, 1 Part in 262,144)
- Nonlinearity 1/2LSB max (DAC1138K)
- Excellent Stability
- Settling to 1/2LSB (0.0002%) in 10μs
- Hermetically-Sealed Semiconductors

DAC1136
- 16-Bit Resolution and Accuracy (152μV, 1 Part in 65,536)
- Low Cost
- Nonlinearity 1/2LSB max (DAC1136K, L)
- Settling to 1/2LSB max (0.0008%) in 6μs

DEGLITCHER IV
- Eliminates DAC Glitches
- Available on DAC1136/1138 Card-Mounted Assembly

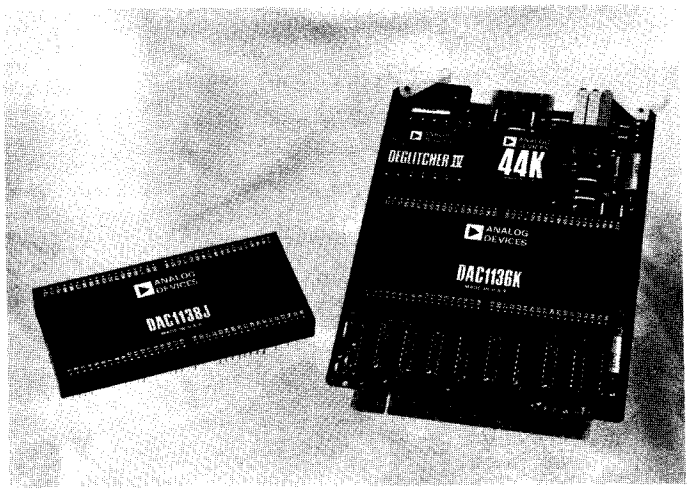

GENERAL DESCRIPTION

The DAC1136/1138 are complete self-contained current or voltage output modular digital-to-analog converters with resolutions and accuracies of 16 and 18 bits.

The DAC1136/1138 combine precision current sources with state-of-the-art steering switches to produce a very linear output. Inputs to these converters are compatible with TTL levels. The converters have a current output of -2mA full scale. A voltage output can be obtained by connecting the internal amplifier to the current output by means of jumpers. By using additional jumpers, the user can select any one of the following output ranges: 0 to +5V, 0 to +10V, ±5V, or ±10V.

The DAC1136/1138 are available on Card-Mounted Assemblies. In this configuration, selectable options include: input codes, output amplifiers, and a high speed transient-suppressing Deglitcher Module, Deglitcher IV.

WHERE TO USE HIGH RESOLUTION DACS

The DAC1136/1138 deliver exceptional accuracy for a broad range of display, test and instrumentation applications. The DAC1136, with a resolution of 16 bits or 1 part in 65,536, and the DAC1138 with a resolution of 18 bits or 1 part in 262,144 are ideally suited for applications requiring wide dynamic range measurement and control. Applications include data acquisition systems, high resolution CRT displays, automatic semiconductor testing, photo-typesetting, frequency synthesis and nuclear reactor control.

CERTIFICATE OF CALIBRATION

Each DAC1138 has been calibrated with equipment and methods that are traceable to the National Bureau of Standards (NBS). A Certificate of Performance is sent with each unit, which includes linearity test data.

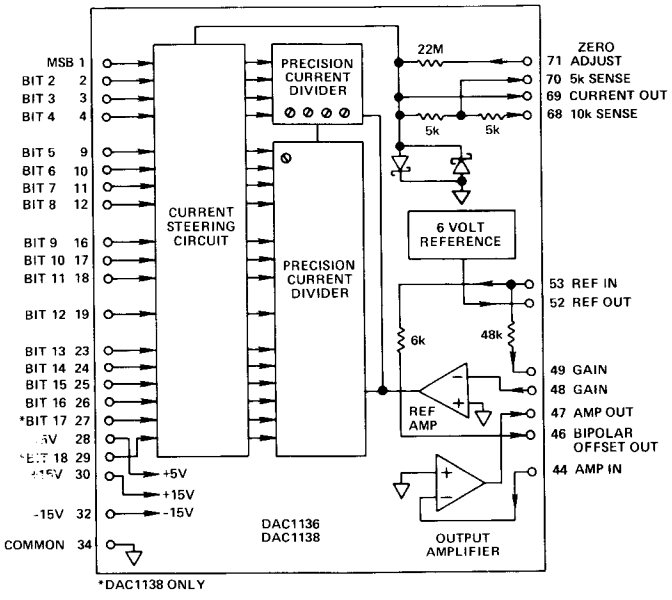

Figure 1. Block Diagram and Pin Designations

P.O. Box 280; Norwood, Massachusetts 02062 U.S.A.
Tel: 617/329-4700 Twx: 710/394-6577
Telex: 924491 Cables: ANALOG NORWOODMASS

SPECIFICATIONS (typical @ +25°C, rated power supplies unless otherwise noted; specifications for mounting card with amplifier/deglitcher options same as module unless otherwise noted)

	DAC1136 Module			DAC1136 on Mounting Card with Amplifier/Deglitcher Options.		
	J	K	L	Deglitcher IV (Internal AD542K)	Low Drift 234L w/wo Deglitcher	High Speed 44K w/wo Deglitcher
RESOLUTION, BITS	16					
ACCURACY						
Integral Nonlinearity	± 1LSB max	± 1/2LSB max	± 1/2LSB max			
Differential Nonlinearity	± 1LSB max	± 1/2LSB max	± 1/2LSB max			
Gain and Offset Error (Externally Adjustable)				Gain, offset and glitch–nulling adjustments provided on the mounting card.		
ANALOG OUTPUT						
Unipolar Mode	− 2mA to 0mA					
Bipolar Mode	− 1mA to + 1mA					
Voltage Output Range (Pin Selectable)	0 to + 5V, 0 to + 10V, ± 5V, ± 10V					
DIGITAL INPUTS	TTL/CMOS; See Figure 2					
INPUT CODES						
Unipolar Mode	Complementary Binary (COMP BIN)			BIN, COMP BIN, 2's COMP, COMP 2's COMP		
Bipolar Mode	Complementary Offset Binary (COMP OBIN)			OBIN, COMP OBIN SIGN PLUS MAG BIN, COMP SIGN PLUS MAG BIN		
STROBE INPUT	None			One standard series 74LS load, leading-edge triggered, pulse width 100ns minimum.		
DYNAMIC CHARACTERISTICS						
Settling Time to 1/2LSB						
Current						
Full Scale Step	8μs			Voltage Output, Only		
LSB Step	6μs			Voltage Output, Only		
Voltage						
Unipolar (10V Step)	90μs			80μs	45μs	25μs
Bipolar (20V Step)	250μs			90μs	60μs	30μs
LSB Step	8μs			8μs	8μs	8μs
Slew Rate	1V/μs			2V/μs	6V/μs	20V/μs
TEMPERATURE COEFFICIENTS (ppm of FSR/°C)[1]						
Integral Nonlinearity	± 1	± 1	± 1.5 max			
Differential Nonlinearity	± 1	± 1	± 1.5 max			
Gain (Excluding V_{REF})	± 5	± 5	± 8 max			
Offset						
Unipolar Mode	± 0.5			± 0.5	± 0.1	± 2
Bipolar Mode	± 5					
STABILITY, LONG TERM (ppm of FSR/1,000 hrs.)[2]						
Gain (Excluding V_{REF})	± 5					
Offset	± 6			± 1	± 0.5	± 25
NOISE (Include V_{REF}; Double for Bipolar Mode)						
Output Current (BW = 100kHz)	0.5nA rms			Voltage Output, Only		
Output Voltage (BW = 0.1–10Hz)						
" 0V (All 1's Code; "ZERO")	4μV pk-pk					
" 5V (MSB = 0 Code; "Half Scale")	6μV pk-pk					
" 10V (All 0's Code; "Full Scale")	9μV pk-pk					
Output Voltage (BW = 100kHz)	30μV rms			20μV rms	40μV rms	35μV rms
VOLTAGE COMPLIANCE (Amplifier Offset, E_{OS})						
Max E_{OS} Allowed for Rated Accuracy	± 2mV max					
Initial E_{OS} (Factory Adj.)	± 100μV			± 50μV	± 20μV	± 100μV
E_{OS} Drift	± 10μV/°C			± 5μV/°C	± 0.1μV/°C	± 15μV/°C
Current Output (pin 69)						
Voltage Protection	via Internal Schottky Diodes					
Source Resistance						
Unipolar Mode	>33kΩ					
Bipolar Mode	>5kΩ					
Source Capacitance	150pF					
REFERENCE VOLTAGE (V_{REF})						
Voltage (Z_{OUT} ≈200Ω)	+ 6.000V (Maximum Error, ± 0.024V)					
Noise (BW = 0.1–10Hz)	3μV pk-pk					
Tempco	5ppm/°C					
POWER SUPPLY REQUIREMENTS[3]						
− 5V dc, ± 5%	9mA				95mA	
± 15V dc, ± 5%	± 30mA			± 38mA	± 37mA	± 40mA
POWER SUPPLY REJECTION (± 15V dc)						
Gain or Offset vs. FSR	80dB			100dB	100dB	75dB
Differential Nonlinearity	± 1/4LSB per Volt ΔV_S					
ENVIRONMENTAL						
Operating Temperature	0 to + 70°C					
Storage Temperature	− 55°C to + 85°C			− 55°C to + 85°C	− 55°C to + 85°C	− 55°C to + 85°C
Humidity	5% to 95%, Noncondensing					

NOTES
[1]Maximum temperature coefficients guaranteed from 15°C to 35°C, typical from 0 to + 70°C.
[2]Recommended DNL calibration check: 6 months.
[3]Recommended Power Supply: Analog Devices Model 923.
Specifications subject to change without notice.

SPECIFICATIONS (typical @ +25°C, rated power supplies unless otherwise noted; specifications for mounting card with amplifier/deglitcher options same as module unless otherwise noted)

	DAC1138 Module		DAC1138 on Mounting Card with Amplifier/Deglitcher Options.	
	J	K	Deglitcher IV (Internal AD542K)	Low Drift 234L w/wo Deglitcher
RESOLUTION, BITS	18			
ACCURACY				
Integral Nonlinearity	± 1LSB max	± 1/2LSB max		
Differential Nonlinearity	± 1LSB max	± 1/2LSB max		
Gain and Offset Error (Externally Adjustable)			Gain, offset and glitch–nulling adjustments provided on the mounting card.	
ANALOG OUTPUT				
Unipolar Mode	− 2mA to 0mA			
Bipolar Mode	− 1mA to + 1mA			
Voltage Output Range (Pin Selectable)	0 to + 5V, 0 to + 10V, ± 5V, ± 10V			
DIGITAL INPUTS	TTL/CMOS; See Figure 2			
INPUT CODES				
Unipolar Mode	Complementary Binary (COMP BIN)		BIN, COMP BIN, 2's COMP, COMP 2's COMP	
Bipolar Mode	Complementary Offset Binary (COMP OBIN)		OBIN, COMP OBIN SIGN PLUS MAG BIN, COMP SIGN PLUS MAG BIN	
STROBE INPUT	None		One standard series 74LS load, leading-edge triggered, pulse width 100ns minimum.	
DYNAMIC CHARACTERISTICS				
Settling Time to 1/2LSB				
Current				
Full Scale Step	10μs		Voltage Output, Only	
LSB Step	8μs		Voltage Output, Only	
Voltage				
Unipolar (10V Step)	175μs		80μs	45μs
Bipolar (20V Step)	140μs		90μs	60μs
LSB Step	18μs		18μs	18μs
Slew Rate	2V/μs		2V/μs	6V/μs
TEMPERATURE COEFFICIENTS (ppm of FSR/°C)				
Integral Nonlinearity	± 0.3			
Differential Nonlinearity	± 0.4			
Gain (Excluding V_{REF})	± 0.8			
Offset				
Unipolar Mode	± 0.5		± 0.5	± 0.1
Bipolar Mode	± 1			
STABILITY, LONG TERM (ppm of FSR/1,000 hrs.)[1]				
Gain (Excluding V_{REF})	± 2			
Offset	± 2		± 1	± 0.5
NOISE (Include V_{REF}; Double for Bipolar Mode)				
Output Current (BW = 100kHz)	0.5nA rms		Voltage Output, Only	
Output Voltage (BW = 0.1–10Hz)				
@ 0V (All 1's Code; "ZERO")	4μV pk-pk			
@ 5V (MSB = 0 Code; "Half Scale")	6μV pk-pk			
@ 10V (All 0's Code; "Full Scale")	9μV pk-pk			
Output Voltage (BW = 100kHz)	30μV rms		20μV rms	40μV rms
VOLTAGE COMPLIANCE (Amplifier Offset, E_{OS})				
Max E_{OS} Allowed for Rated Accuracy	± 200μV max			
Initial E_{OS} (Factory Adj.)	± 100μV		± 50μV	± 20μV
E_{OS} Drift	± 10μV/°C		± 5μV/°C	± 0.1μV/°C
Current Output (pin 69)				
Voltage Protection	via Internal Schottky Diodes			
Source Resistance				
Unipolar Mode	>33kΩ			
Bipolar Mode	>5kΩ			
Source Capacitance	150pF			
REFERENCE VOLTAGE (V_{REF})				
Voltage ($Z_{OUT} \approx 200\Omega$)	+ 6.000V (Maximum Error, ± 0.024V)			
Noise (BW = 0.1–10Hz)	3μV pk-pk			
Tempco	5ppm/°C			
POWER SUPPLY REQUIREMENTS[2]				
+ 5V dc, ± 5%	9mA			95mA
± 15V dc, ± 5%	± 30mA		± 38mA	± 37mA
POWER SUPPLY REJECTION (± 15V dc)				
Gain or Offset vs. FSR	80dB		100dB	75dB
Differential Nonlinearity	± 1/4LSB per Volt ΔV_S			
ENVIRONMENTAL				
Operating Temperature	0 to + 70°C			
Storage Temperature	− 55°C to + 85°C		− 55°C to + 85°C	− 55°C to + 85°C
Humidity	5% to 95%, Noncondensing			

NOTES:
[1]Recommended DNL calibration check: 6 months.
[2]Recommended Power Supply Analog Devices: Model 923.
Specifications subject to change without notice.

Characteristic Curves*

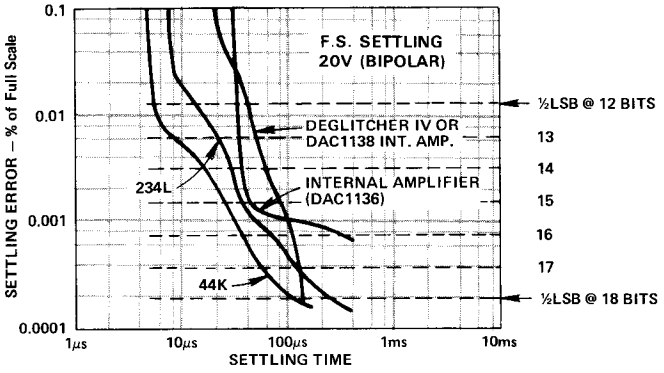

Settling Time (Voltage Output) vs. %-of-Full-Scale-Error for 20V Output Step (+10V ⇄ -10V)

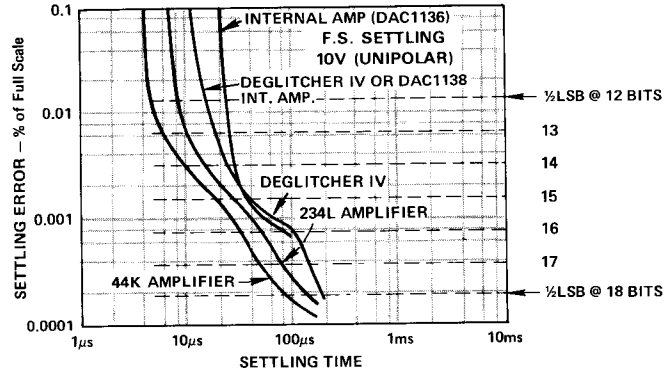

Settling Time (Voltage Output) vs. %-of-Full-Scale-Error for 10V Output Step (0V ⇄ +10V)

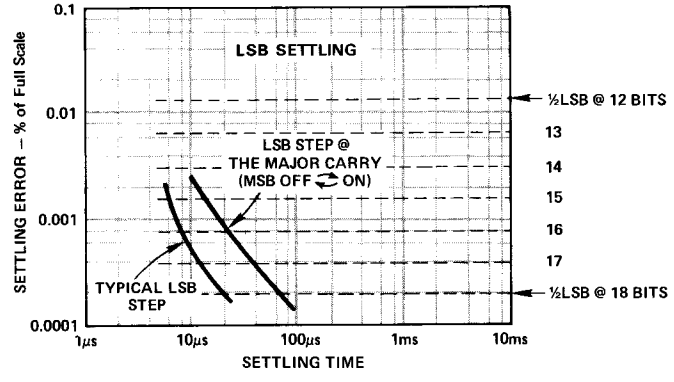

Settling Time (Voltage Output) vs. %-of-Full-Scale-Error for LSB Steps (Essentially Independent of Amplifier Used). With Deglitcher IV, the LSB Step at the Major Carry Settles as Fast as the Typical LSB Step, Following the 11μs Hold Period.

*NOTE: All curves typical at rated supply voltage.
F.S. = Full Scale

INPUT CONSIDERATIONS

The DAC1136/1138 may be driven by TTL or CMOS as shown in Figure 2. Note that the TTL input is shown with inputs for both a direct "totem pole" TTL gate and open collector (or "pull-up") configurations.

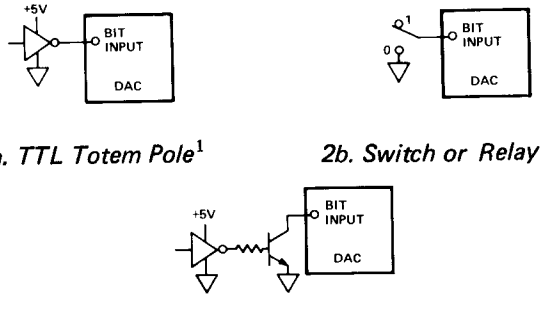

2a. TTL Totem Pole[1] *2b. Switch or Relay Input[2]*

2c. CMOS Input

1. FOR TTL WITH OPEN COLLECTOR, DO NOT USE EXTERNAL PULL-UP. CONVERTERS HAVE INTERNAL 10kΩ PULL-UP ON EACH INPUT TO 3.8V.
2. USE SPST SWITCH OR RELAY TO GROUND. WHEN SWITCH IS OPEN, THE INTERNAL 10kΩ WILL PULL INPUT UP TO 3.8V.

Figure 2. Input Connections

OUTPUT CONNECTIONS AND GUARDING

The DAC1136/1138 output connections for various voltage ranges are shown in Figure 3.

Since an LSB is only 38μV (at 10 volts full scale for the DAC1138), care must be exercised to properly guard the current output of the converter from leakage current. Any connection made to the DAC's current output (pin 69) should be guarded. Suggested printed circuit board guarding is shown in Figure 3. The optional Card-Mounted Assemblies of the DAC1136/1138 have been carefully designed for optimum guarding and performance.

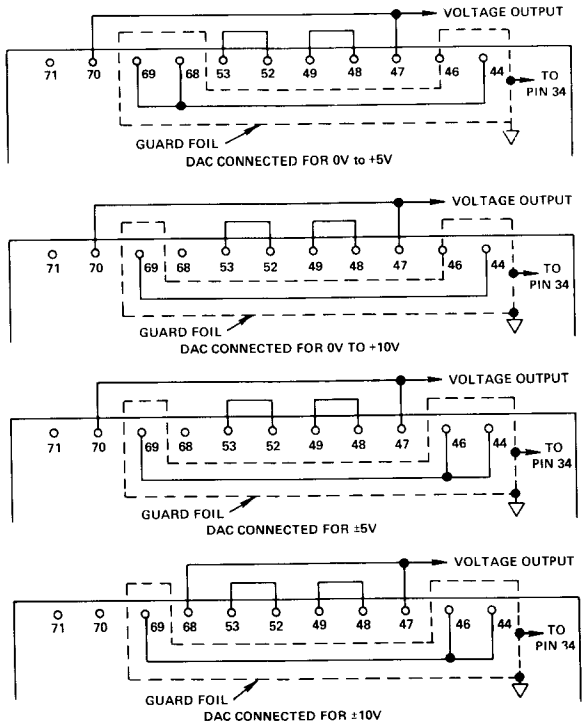

Figure 3. Output Voltage Connections and Suggested PCB Guarding (Unipolar and Bipolar)

GAIN AND OFFSET ADJUSTMENTS

The gain and offset adjustments are made with external potentiometers which the user supplies. With the appropriate digital inputs applied, these potentiometers are adjusted until the desired output voltage is obtained. The proper connections for offset and gain are shown in Figure 4. The voltmeter used to measure the output should be capable of stable resolution of 1/4LSB in the region of zero and full scale. Because of the interaction between offset and gain adjustments, the adjustment procedure described below should be carefully followed. Offset adjustment affects gain, but gain adjustment does not affect offset.

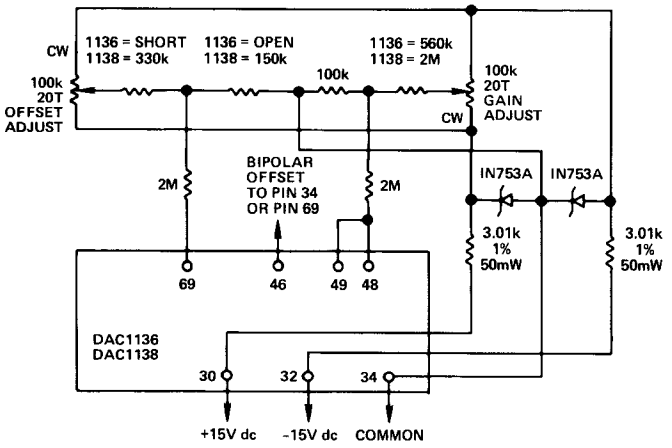

NOTES:
1. ALL FIXED RESISTORS ARE 5% CARBON COMP, UNLESS OTHERWISE NOTED.
2. ALL POTENTIOMETERS ARE 20-TURN INFINITE RESOLUTION TYPE.

Figure 4. Gain and Offset Adjustments

For unipolar mode, apply a digital input of all "1's" (complementary binary code for zero output) and adjust the offset potentiometer until a 0.00000V output is obtained (see Table I). Once the appropriate offset adjustment has been made, apply a digital input of all "0's". Adjust the gain potentiometer until the plus full scale output is obtained (see Table I).

For bipolar mode, apply a digital input of all "1's" (complementary offset binary code for minus full scale) and adjust the offset potentiometer for the proper minus full scale output voltage (see Table I). Once the appropriate minus full scale adjustment has been made, apply a digital input of all "0's". Adjust the gain potentiometer until the plus full scale output shown below is obtained.

RANGE	IDEAL OUTPUT		
		DAC1138	DAC1136
Unipolar:	All 11...1	All 00...0	
0V→+10V	0.00000V	+9.999962V	+9.999848V
0V→+5V	0.00000V	+4.999981V	+4.999924V
Bipolar:			
-10V→+10V	-10.00000V	+9.999934V	+9.999695V
-5V → +5V	-5.00000V	+4.999962V	+4.999848V
To adjust:	Adjust ZERO pot	Adjust GAIN pot	

Table I. Full Scale Output

DIFFERENTIAL LINEARITY ADJUSTMENT

Each DAC1136/1138 has been factory calibrated and tested to achieve the performance indicated in the electrical specifications. Before attempting recalibration, it is imperative that the circuit be checked to confirm that all previously described precautions have been taken to insure proper application at the 16- or 18-bit level. Basically, the DAC is trimmed by comparing a bit to the sum of all lower bits, and adjusting, if necessary, for a one LSB positive difference. The top 4 major carries, i.e., MSB minus the sum of bits 2-through-the-LSB, down through bit 4 minus the sum of bits 5-through-the-LSB, can be trimmed using the procedure outlined below. A differential voltmeter capable of 100μV Full Scale should be connected to V_{OUT} of the DAC. This will resolve an LSB which at 18 bits is 38μV (10V range). A Fluke 895A or equivalent is recommended.

1. Bit 4 Trim
   a. Set bit inputs to 11110 . . . . 0.
   b. Read the output voltage by nulling the voltmeter.
   c. Set bit inputs to 11101 . . . . 1.
   d. Read voltage by nulling voltmeter. This reading should be equal to that of step 1b plus 1LSB. Adjust bit 4 if required (see B4, Figure 6).
2. Bit 3 Trim
   a. Set bit inputs to 1110 . . . . 0.
   b. Read output voltage by nulling the voltmeter.
   c. Set inputs to 1101 . . . . 1.
   d. Read voltage by nulling the voltmeter. This reading should be equal to that of step 2b plus 1LSB. Adjust bit 3 if required (see B3, Figure 6).
3. Bit 2 Trim
   a. Set bit inputs to 110 . . . . 0.
   b. Read output voltage by nulling the voltmeter.
   c. Set bit inputs to 101 . . . . 1.
   d. Read voltage by nulling voltmeter. This reading should be equal to that of step 3b plus 1LSB. Adjust bit 2 if required (see B2, Figure 6),
4. Bit 1 (MSB) Trim
   a. Set bit switches to 100 . . . . 0.
   b. Read output voltage by nulling the voltmeter.
   c. Set bit switches to 011 . . . . 1.
   d. Read voltage by nulling voltmeter. This reading should be equal to that of step 4b plus 1LSB. Adjust bit 1 (MSB) if required (see MSB, Figure 6).

If insufficient range exists on any adjustment, then a separate adjustment for the weight of bits 5-through-the-LSB (see Sum B5 → LSB, Figure 6) should be performed. This condition will probably not occur on bit 2, 3 and 4 but might occur on the MSB. If adjustment of the sum of bits 5-through-the-LSB is made, the trim procedure for all bits should be repeated. Obviously, since the procedure affects the weight of individual bits, it affects the overall gain of the DAC. The final step should be adjustment of gain (user supplied adjustment external to module, or pot at edge of mounting card).

OUTLINE DIMENSIONS AND PIN DESIGNATIONS

Dimensions shown in inches and (mm).

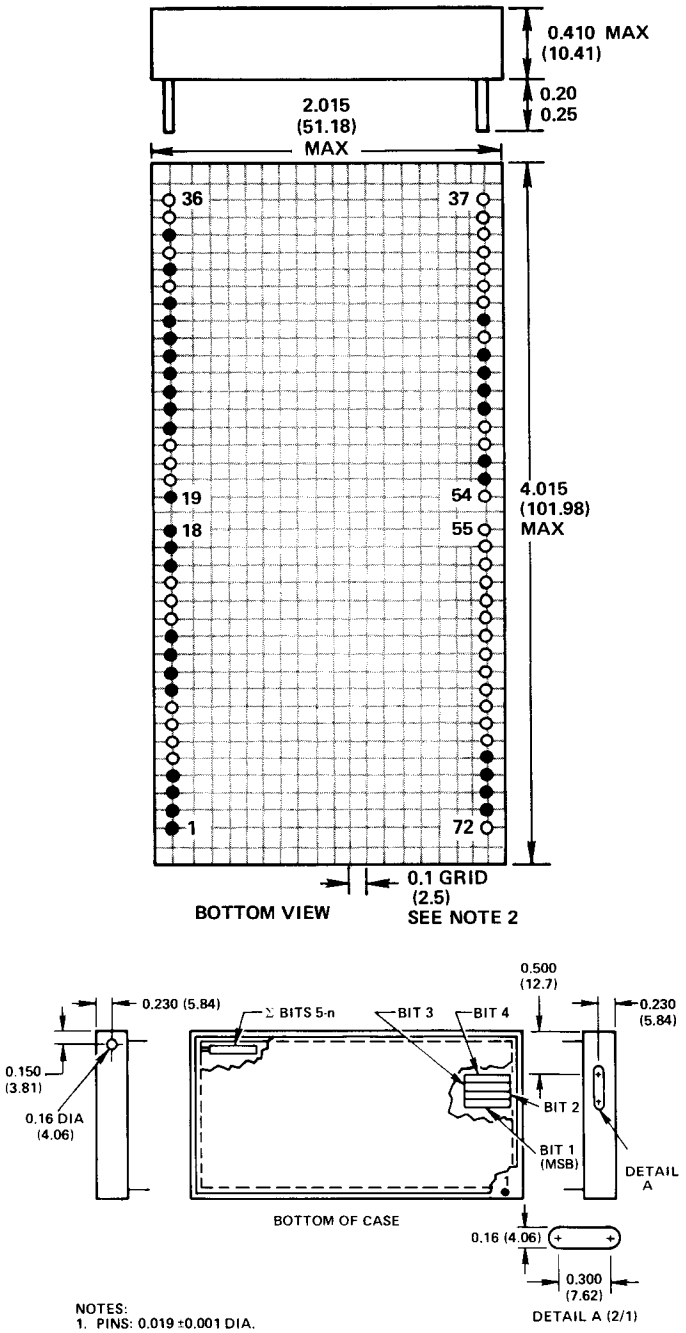

NOTES:
1. PINS: 0.019 ±0.001 DIA.
2. GRID AND MARKINGS NEXT TO PINS ARE FOR REFERENCE ONLY AND DO NOT APPEAR ON UNIT.
3. PINS 27 AND 29 ARE NOT PRESENT ON DAC1136.

ASSEMBLY INSTRUCTIONS

CAUTION: This module is not an embedded assembly and is not hermetically sealed. Do not subject to a solvent or water-wash process that would allow direct contact with free liquids or vapors. Entrapment of contaminants may occur, causing performance degradation and permanent damage. Install after any clean/wash process and then only spot clean by hand.

USING AN EXTERNAL 6V REFERENCE

The DAC1136/1138 can be operated with an external reference connected to pin 53 of the module. The current drain on the external reference will be 1.125mA in bipolar mode or 0.125mA in unipolar mode (pin 46 should be left open and not grounded when using an external reference in the unipolar mode). When an external reference is used, pin 52, (the output of the internal reference) is left open.

Codi Semiconductor manufactures a reference module called Certavolt[1] with a 10 volt output accurate to 0.001%. This output is temperature compensated to within 1ppm/°C from +15°C to +55°C. The Certavolt requires a power supply of +28V dc @ 20mA. To convert the +10 volt output of the Certavolt to the +6 volt reguired by the DAC, the circuit shown in Figure 5 is recommended.

[1] Certavolt is a registered trade name by Codi Semiconductor.

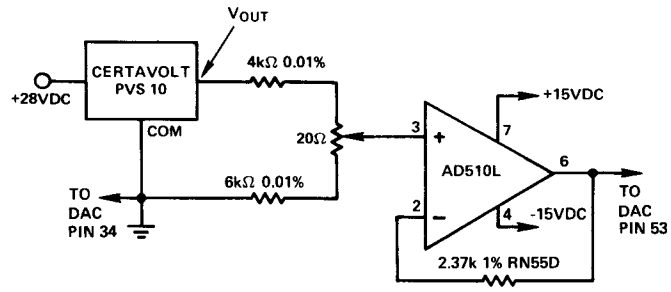

Figure 5. DAC1136/1138 with External Precision Reference

OPTIONAL CARD-MOUNTED ASSEMBLY

Analog Devices offers an optional Card-Mounted Assembly designed to provide optimum performance at the 18-bit level. As shown in Figure 6, this 4 1/2" X 6" printed circuit card includes the appropriate DAC GAIN and OFFSET adjustment potentiometers, power supply bypass capacitors and input registers. The Card-Mounted Assembly can be ordered with custom code-setting logic, external output amplifiers, and a Deglitcher IV.

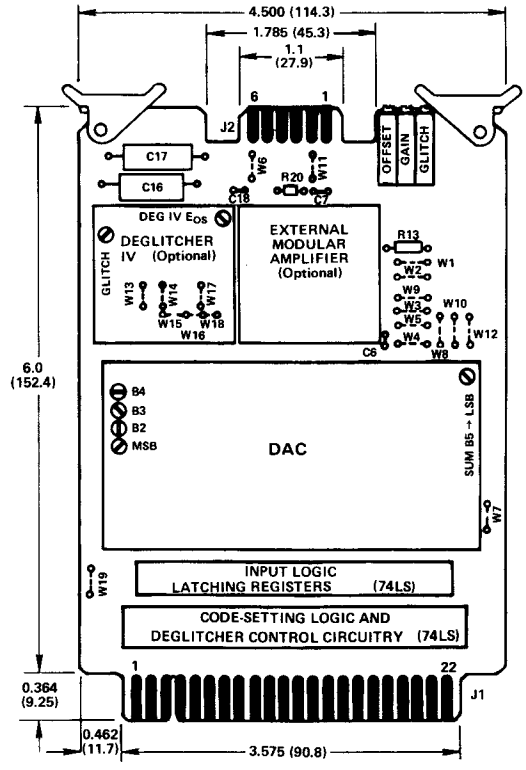

W'S INDICATE JUMPER POSITIONS.
TO ISOLATE ANALOG AND DIGITAL GROUND W7 IS OMITTED.
W6 AND W11 ARE NOT INSTALLED WHEN USER DESIRES 4-WIRE CONNECTION TO J2 WHEN EITHER A 44K OR 234L AMPLIFIER IS USED.

Figure 6. Card-Mounted Assembly. Dimensions shown in inches and (mm).

CARD-MOUNTED ASSEMBLY JUMPER DESIGNATIONS

The output voltage range, reference source, amplifier and deglitcher configurations are programmed at the factory by means of jumpers, resistors, and capacitors (see ordering guide for details). The mounting card can be programmed by the user, if necessary, as shown below.

Output Voltage Range	Install Jumpers
±10V	W10, W5
±5V	W12, W5
+10V	W12, W3

Reference	Install Jumpers
Internal	W2
External	W1

Amplifier	Install Jumpers
Internal	W4, W9
External[1]	W8, W13
Deglitcher IV[2]	W8, W15, W17, W18
Deg. IV with Ext Amp[3]	W8, W14, W16

NOTES:

[1] With a 234L amplifier install C7 (0.01μF, 10%, ceramic capacitor). With a 44K amplifier use a variable resistor (typ value ≈ 499Ω, 0.1W, 1%) to adjust the output voltage for a ±100μV reading as measured between pins 69 and 34 of the DAC (this step sets voltage compliance); install this value resistor (R13 position).

[2] With Deglitcher IV remove R20 (100Ω) and replace the resistor with a jumper.

[3] With Deglitcher IV and a 234L amplifier remove C6 (6.8pF Capacitor) and install: C7 (0.01μF, 10%, ceramic capacitor), C18 (100pF, 10%, ceramic capacitor), C17 (1000pF, 10%, polystyrene capacitor) and replace R20 (100Ω) with a jumper. With Deglitcher IV and a 44K amplifier perform the operation described in Note 1, remove C6 (6.8pF capacitor) and install: C18 (100pF, 10%, ceramic capacitor), C17 (1000pF, 10% polystyrene capacitor) and replace R20 (100Ω) with a jumper.

CONNECTOR J1

PIN	FUNCTION	PIN	FUNCTION
A	BIT 1	U	STROBE
B	BIT 2	V	BIT 18[1]
C	BIT 3	W	+5V
D	BIT 4	X	+15V
E	BIT 5	Y	-15V
F	BIT 6	Z	DIGITAL GND
H	BIT 7	1-4	NC
J	BIT 8	5	INTERLOCK
K	BIT 9	6	INTERLOCK
L	BIT 10	7-16	NC
M	BIT 11	17	BIT 17[1]
N	BIT 12	18	
P	BIT 13	19	
R	BIT 14	20	
S	BIT 15	21	
T	BIT 16	22	

J1 MATES WITH CINCH P.N. 251-22-30-160 (SUPPLIED).

[1] DAC1138 ONLY

CONNECTOR J2

PIN	FUNCTION
1	ANALOG SENSE LOW
2	ANALOG SOURCE LOW
3	NC
4	ANALOG SOURCE HIGH
5	ANALOG SENSE HIGH
6	ANALOG REF. IN/OUT
A	ANALOG REF. IN/OUT
B	ANALOG SENSE HIGH
C	ANALOG SOURCE HIGH
D	NC
E	ANALOG SOURCE LOW
F	ANALOG SENSE LOW

J2 MATES WITH CINCH P.N. 251-06-30-160 (SUPPLIED).

Mounting Card Connector Designations

DEGLITCHER IV

The Deglitcher IV is a precision high-speed, high-isolation sample-and-hold circuit which eliminates the glitches that occur whenever a DAC is dithered through a major carry. Su momentary transients can be of concern in applications such as high-resolution CRT beam positioning, where glitch-free code transitions are often required for optimum display qua ity and legibility. Oscilloscope photographs in Figures 7a anc 7b below show the output of a DAC1136 being dithered up and down through the major carry, between codes 1000000000000000 and 0111111111111111. In Figure 7b, the Deglitcher IV is turned on virtually elminating the glitches and allowing the 152μV LSB step to be clearly seen.

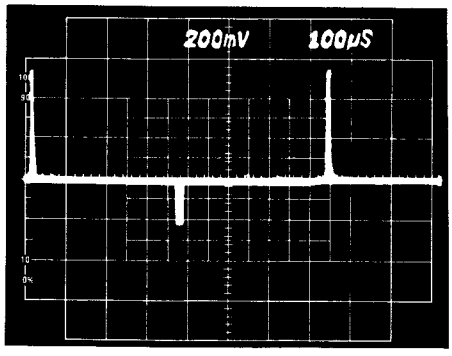

Figure 7a. DAC1136; Major-Carry Dither without Deglitch IV (BW = 1MHz), Vertical Scale 0.2V/Division

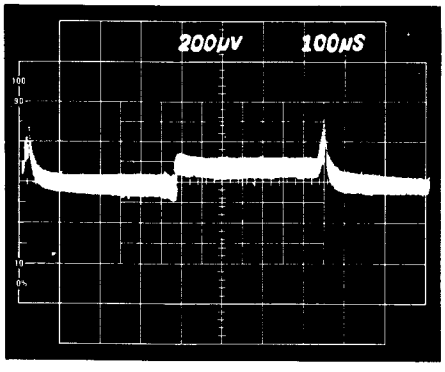

Figure 7b. Same Major-Carry Dither with Deglitcher IV (BW = 1MHz), Vertical Scale, 200μV/Division

The Deglitcher IV utilizes a proprietary sampling technique which isolates the output amplifier during the critical 10μs period immediately following a code change. The only discernible difference in DAC performance when used with Deglitcher IV is a delay of approximately 11μs after the strobe goes HI before the (deglitched) DAC output voltage starts slewing toward the new value.

GLITCH ADJUSTMENT

There are two "Glitch" adjustment potentiometers, accessible on the Card-Mounted Assembly. The adjustment on the card permits nulling of any Track-to-Hold offset, whereas th adjustment internal to the Deglitcher IV allows for precise nulling of the Hold-to-Track transient. Because of the near-infinite attenuation of the actual DAC current glitches, no current-glitch transient is visible on the output. For this reason, it is easiest to null the 2 Deglitcher adjustments whil strobing the Card with a static digital input.

INPUT OPTIONS

The Card-Mounted Assembly contains input registers. The input code ordered by the user is set at the factory by means of various jumpers in the logic circuitry. See ordering guide for details.

Since the Card-Mounted Assembly contains input registers, the card requires a strobe pulse circuit. Strobe characteristics of input registers are:

1. Strobe Pulse: One Std. series 74LS load, Leading-Edge-Triggered. Positive pulse should remain HI for > 100ns.
2. The digital input code can be changed at any time up to and including that instant when the strobe command goes HI.
3. The actual transfer of the input code to the DAC will occur ≈ 3μs after the strobe command; during this 3μs the digital input code to the card assembly should not be changed, in order to prevent the possible coupling of logic noise into the DAC output. At t_0 +3μs, the deglitcher is automatically enabled for the following ≈ 8μs. Thus there will be a delay of ≈ 11μs before the deglitched output starts slewing to the new value. Actual data transfer to the DAC automatically occurs at t_0 +3.1μs.

OUTPUT OPTIONS

The Card-Mounted Assembly for the DAC1136/1138 allows for several user-selectable output configurations:

1. Internal Output Amplifier inside the DAC Module.
2. Analog Devices model 234L; for low noise, low drift applications (2μV, ±0.1μV/°C).
3. Analog Devices model 44K; available only with DAC1136 recommended only for high speed or high current applications.
4. Deglitcher IV with self-contained precision BI-FET output amplifier (AD542K).
5. Deglitcher IV with model 234L output amplifier.
6. Deglitcher IV with model 44K output amplifier (recommer with DAC1136 only).

When using an external amplifier, a four terminal output connection can be utilized on the Card-Mounted Assembly in order to allow for compensation of connector contact resistance.

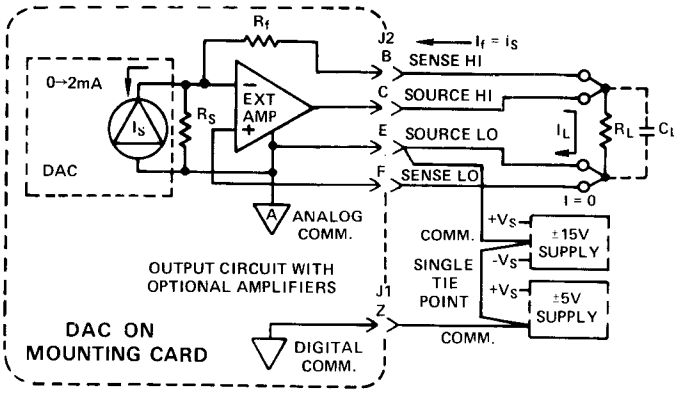

NOTE:
1. VOLTAGE DROP BETWEEN SOURCE LO AND SENSE LO MUST OBSERVE CURRENT MODE COMPLIANCE LIMITS FOR RATED ACCURACY.
2. THIS CONNECTION SCHEME CANNOT BE USED WITH INTERNAL AMPLIFIER OF THE DAC OR WITH THE AMPLIFIER INTERNAL TO THE DEGLITCHER IV.

Figure 8. Four-Terminal Output Connections

ORDERING GUIDE

WHEN ORDERING THE DAC1136 OR DAC1138, ORDER EITHER:

1. Module only: DAC1136J, DAC1136K, DAC1136L, DAC1138J, DAC1138K

2. DAC1136/1138 as a Card-Mounted Assembly:

DAC113 ☐ ☐

CODE	CODE	DAC MODULE RESOLUTION	DAC MODULE LINEARITY
6	J	16 BITS	15 BITS
6	K	16 BITS	16 BITS
6	L	16 BITS	16 BITS
8	J	18 BITS	17 BITS
8	K	18 BITS	18 BITS

☐

CODE	OUTPUT AMPLIFIER
1	INTERNAL
2	44K[1]
3	234L
4	DEGLITCHER IV
5	DEGLITCHER IV[1] AND 44K
6	DEGLITCHER IV AND 234L

NOTE 1: NOT AVAILABLE FOR DAC1136L, DAC1138J AND DAC1138K.

☐

CODE	INPUT LOGIC CODE
1	BIN/OBIN
2	COMP BIN/COMP OBIN
3	2'S COMP
4	COMP 2'S COMP
5	SIGN PLUS MAG BIN
6	COMP SIGN MAG BIN

☐

CODE	OUTPUT VOLTAGE RANGE
1	+10V
2	±5V
3	±10V

☐

CODE	DAC VOLTAGE REFERENCE
1	INTERNAL
2	EXTERNAL