LCC-40K2, LCD Character Module 40 x 2

■ FEATURES

- 5 x 7 DOTS WITH CURSOR
- BUILT-IN CONTROLLER (KS0066 OR EQUIVALENT)
- 5 V POWER SUPPLY
- 1/16 DUTY CYCLE
- 4.2 V LED FORWARD VOLTAGE

■ ELECTRICAL CHARACTERISTICS

ITEM		SYMBOL	CONDITION	MIN.	TYP.	MAX.	UNIT
LCD Operating Voltage		V_{DD}-V_O	T=0 °C	-	4.8	-	V
			T=25 °C	-	4.5	-	V
			T=50 °C	-	4.2	-	V
Supply Voltage		V_{DD}-V_{SS}	-	4.7	5	5.3	V
Supply Current		I_{DD}	-	-	3.2	6	mA
Input Voltage	"HIGH" Level	V_{IH}	-	2.2	-	V_{DD}	V
	"LOW" Level	V_{IL}	-	0	-	0.6	V
Output Voltage	"HIGH" Level	V_{OH}	-	2.4	-	-	V
	"LOW" Level	V_{OL}	-	-	-	0.4	V

■ MECHANICAL DATA

ITEM	DIMENSIONS	UNIT
Module Size (W x H x T)	182.0 x 33.5 x 8.8 (12.7 LED)	mm
Viewing Area (W x H)	154.0 x 15.3	mm
Character Size (W x H)	3.20 x 5.55	mm
Character Pitch (W x H)	3.70 x 5.95	mm
Dot Size (W x H)	0.60 x 0.65	mm
Dot Pitch (W x H)	0.65 x 0.70	mm

■ BLOCK DIAGRAM

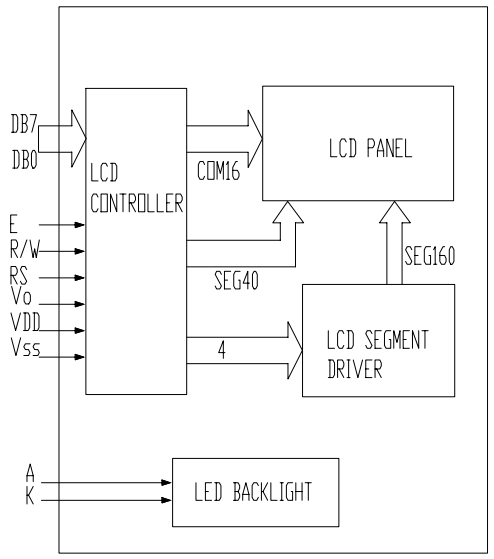

■ INTERFACE PIN CONNECTIONS

NO.	SYMBOL	FUNCTION	NO.	SYMBOL	FUNCTION
1	V_{SS}	Supply Ground	9	DB2	Data Bit 2
2	V_{DD}	Supply Voltage	10	DB3	Data Bit 3
3	V_O	Contrast Adj.	11	DB4	Data Bit 4
4	RS	Register Select	12	DB5	Data Bit 5
5	R/W	Read/Write	13	DB6	Data Bit 6
6	E	Enable Signal	14	DB7	Data Bit 7
7	DB0	Data Bit 0	15	A	LED Power
8	DB1	Data Bit 1	16	K	LED Power

■ EXTERNAL DIMENSIONS

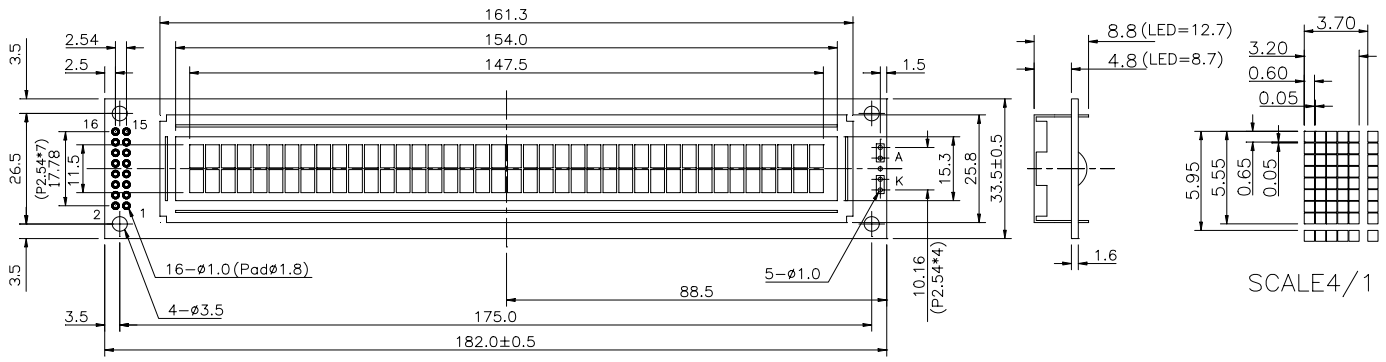

DELTA COMPONENTS Auweg 27 D-79761 Waldshut-Tiengen Tel: +49/7751/8399-0 Fax: +49/7751/8399-99 Mail: info@delta-components.de www.delta-components.de