2.5 V to 5.5 V, 120 µA, 2-Wire Interface, Voltage-Output 8-/10-/12-Bit DACs

AD5301/AD5311/AD5321

FEATURES

AD5301: buffered voltage output 8-bit DAC
AD5311: buffered voltage output 10-bit DAC
AD5321: buffered voltage output 12-bit DAC
6-lead SOT-23 and 8-lead MSOP packages
Micropower operation: 120 µA @ 3 V
2-wire (I^2C®-compatible) serial interface
Data readback capability
2.5 V to 5.5 V power supply
Guaranteed monotonic by design over all codes
Power-down to 50 nA @ 3 V
Reference derived from power supply
Power-on reset to 0 V
On-chip rail-to-rail output buffer amplifier
3 power-down functions

APPLICATIONS

Portable battery-powered instruments
Digital gain and offset adjustment
Programmable voltage and current sources
Programmable attenuators

GENERAL DESCRIPTION

The AD5301/AD5311/AD5321[1] are single 8-/10-/12-bit, buffered, voltage-output DACs that operate from a single 2.5 V to 5.5 V supply, consuming 120 µA at 3 V. The on-chip output amplifier allows rail-to-rail output swing with a slew rate of 0.7 V/µs. It uses a 2-wire (I^2C-compatible) serial interface that operates at clock rates up to 400 kHz. Multiple devices can share the same bus.

The reference for the DAC is derived from the power supply inputs and thus gives the widest dynamic output range. These parts incorporate a power-on reset circuit, which ensures that the DAC output powers up to 0 V and remains there until a valid write takes place. The parts contain a power-down feature that reduces the current consumption of the device to 50 nA at 3 V and provides software-selectable output loads while in power-down mode.

The low power consumption in normal operation makes these DACs ideally suited to portable battery-operated equipment. The power consumption is 0.75 mW at 5 V and 0.36 mW at 3 V, reducing to 1 µW in all power-down modes.

[1] Protected by U.S. Patent No. 5684481.

FUNCTIONAL BLOCK DIAGRAM

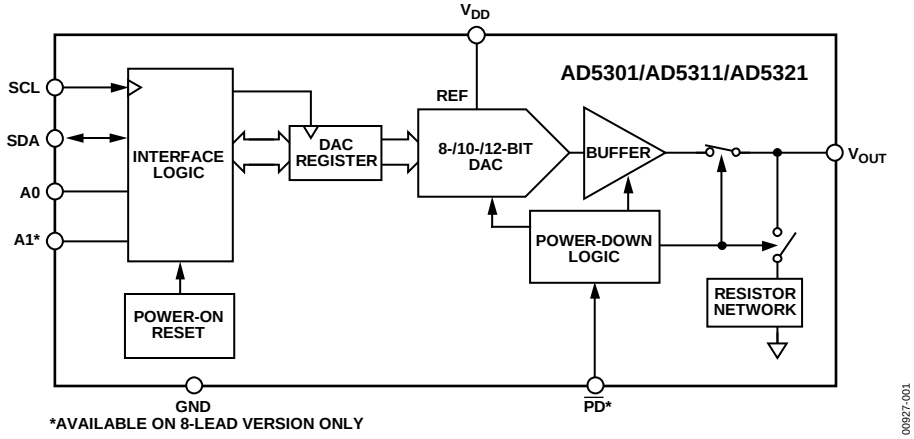

Figure 1.

Rev. B
Information furnished by Analog Devices is believed to be accurate and reliable. However, no responsibility is assumed by Analog Devices for its use, nor for any infringements of patents or other rights of third parties that may result from its use. Specifications subject to change without notice. No license is granted by implication or otherwise under any patent or patent rights of Analog Devices. Trademarks and registered trademarks are the property of their respective owners.

One Technology Way, P.O. Box 9106, Norwood, MA 02062-9106, U.S.A.
Tel: 781.329.4700 www.analog.com
Fax: 781.461.3113 ©1999–2007 Analog Devices, Inc. All rights reserved.

TABLE OF CONTENTS

Features ... 1
Applications ... 1
General Description ... 1
Functional Block Diagram ... 1
Revision History ... 2
Specifications ... 3
AC Characteristics ... 5
Timing Characteristics ... 5
Absolute Maximum Ratings ... 6
ESD Caution ... 6
Pin Configurations and Function Descriptions ... 7
Terminology ... 8
Typical Performance Characteristics ... 9
Theory of Operation ... 13
Digital-to-Analog ... 13
Resistor String ... 13
Output Amplifier ... 13
Power-On Reset ... 13
Serial Interface ... 14
2-Wire Serial Bus ... 14
Input Shift Register ... 14
Write Operation ... 15
Read Operation ... 16
Power-Down Modes ... 17
Application Notes ... 18
Using REF19x as a Power Supply ... 18
Bipolar Operation Using the AD5301/AD5311/AD5321 ... 18
Multiple Devices on One Bus ... 18
CMOS Driven SCL and SDA Lines ... 18
Power Supply Decoupling ... 19
Outline Dimensions ... 20
Ordering Guide ... 21

REVISION HISTORY

3/07—Rev. A to Rev. B

Updated Format ... Universal
Changes to Table 4 ... 6
Changes to Figure 4 Caption ... 7
Updated Outline Dimensions ... 20
Changes to Ordering Guide ... 21

11/03—Rev. 0 to Rev. A

Changes to Ordering Guide ... 4
Updated Outline Dimensions ... 15

7/99—Revision 0: Initial Version

SPECIFICATIONS

V_{DD} = 2.5 V to 5.5 V; R_L = 2 kΩ to GND; C_L = 200 pF to GND; all specifications T_{MIN} to T_{MAX}, unless otherwise noted.

Table 1.

Parameter[2]	B Version[1] Min	Typ	Max	Unit	Conditions/Comments
DC PERFORMANCE[3, 4]					
AD5301					
Resolution		8		Bits	
Relative Accuracy		±0.15	±1	LSB	
Differential Nonlinearity		±0.02	±0.25	LSB	Guaranteed monotonic by design over all codes.
AD5311					
Resolution		10		Bits	
Relative Accuracy		±0.5	±4	LSB	
Differential Nonlinearity		±0.05	±0.5	LSB	Guaranteed monotonic by design over all codes.
AD5321					
Resolution		12		Bits	
Relative Accuracy		±2	±16	LSB	
Differential Nonlinearity		±0.3	±0.8	LSB	Guaranteed monotonic by design over all codes.
Zero-Code Error		5	20	mV	All zeros loaded to DAC, see Figure 12.
Full-Scale Error		±0.15	±1.25	% of FSR	All ones loaded to DAC, see Figure 12.
Gain Error		±0.15	±1	% of FSR	
Zero-Code Error Drift[5]		−20		µV/°C	
Gain Error Drift[5]		−5		ppm of FSR/°C	
OUTPUT CHARACTERISTICS[5]					
Minimum Output Voltage		0.001		V	This is a measure of the minimum and maximum drive capability of the output amplifier.
Maximum Output Voltage		V_{DD} − 0.001		V	
DC Output Impedance		1		Ω	
Short-Circuit Current		50		mA	V_{DD} = 5 V.
		20		mA	V_{DD} = 3 V.
Power-Up Time		2.5		µs	Coming out of power-down mode. V_{DD} = 5 V.
		6		µs	Coming out of power-down mode. V_{DD} = 3 V.
LOGIC INPUTS (A0, A1, $\overline{PD}$)[5]					
Input Current			±1	µA	
Input Low Voltage, V_{IL}			0.8	V	V_{DD} = 5 V ± 10%.
			0.6	V	V_{DD} = 3 V ± 10%.
			0.5	V	V_{DD} = 2.5 V.
Input High Voltage, V_{IH}	2.4			V	V_{DD} = 5 V ± 10%.
	2.1			V	V_{DD} = 3 V ± 10%.
	2.0			V	V_{DD} = 2.5 V.
Pin Capacitance		3		pF	
LOGIC INPUTS (SCL, SDA)[5]					
Input High Voltage, V_{IH}	0.7 × V_{DD}		V_{DD} + 0.3	V	
Input Low Voltage, V_{IL}	−0.3		+0.3 × V_{DD}	V	
Input Leakage Current, I_{IN}			±1	µA	V_{IN} = 0 V to V_{DD}.
Input Hysteresis, V_{HYST}	0.05 × V_{DD}			V	
Input Capacitance, C_{IN}		6		pF	
Glitch Rejection[6]			50	ns	Pulse width of spike suppressed.

Parameter[2]	B Version[1] Min	Typ	Max	Unit	Conditions/Comments
LOGIC OUTPUT (SDA)[5]					
Output Low Voltage, V_{OL}			0.4	V	I_{SINK} = 3 mA.
			0.6	V	I_{SINK} = 6 mA.
Three-State Leakage Current			±1	µA	
Three-State Output Capacitance		6		pF	
POWER REQUIREMENTS					
V_{DD}	2.5		5.5	V	I_{DD} specification is valid for all DAC codes.
I_{DD} (Normal Mode)					DAC active and excluding load current.
V_{DD} = 4.5 V to 5.5 V		150	250	µA	$V_{IH} = V_{DD}$ and V_{IL} = GND.
V_{DD} = 2.5 V to 3.6 V		120	220	µA	$V_{IH} = V_{DD}$ and V_{IL} = GND.
I_{DD} (Power-Down Mode)					
V_{DD} = 4.5 V to 5.5 V		0.2	1	µA	$V_{IH} = V_{DD}$ and V_{IL} = GND.
V_{DD} = 2.5 V to 3.6 V		0.05	1	µA	$V_{IH} = V_{DD}$ and V_{IL} = GND.

[1] Temperature range is as follows: B Version: −40°C to +105°C.
[2] See the Terminology section.
[3] DC specifications tested with the outputs unloaded.
[4] Linearity is tested using a reduced code range: AD5301 (Code 7 to 250); AD5311 (Code 28 to 1000); and AD5321 (Code 112 to 4000).
[5] Guaranteed by design and characterization, not production tested.
[6] Input filtering on both the SCL and SDA inputs suppress noise spikes that are less than 50 ns.

AC CHARACTERISTICS[1]

V_{DD} = 2.5 V to 5.5 V; R_L = 2 kΩ to GND; C_L = 200 pF to GND; all specifications T_{MIN} to T_{MAX}, unless otherwise noted.

Table 2.

Parameter[3]	B Version[2] Min	Typ	Max	Unit	Conditions/Comments
Output Voltage Settling Time					V_{DD} = 5 V
AD5301		6	8	µs	1/4 scale to 3/4 scale change (0x40 to 0xC0)
AD5311		7	9	µs	1/4 scale to 3/4 scale change (0x100 to 0x300)
AD5321		8	10	µs	1/4 scale to 3/4 scale change (0x400 to 0xC00)
Slew Rate		0.7		V/µs	
Major-Code Change Glitch Impulse		12		nV-s	1 LSB change around major carry
Digital Feedthrough		0.3		nV-s	

[1] See the Terminology section.
[2] Temperature range for the B Version is as follows: –40°C to +105°C.
[3] Guaranteed by design and characterization, not production tested.

TIMING CHARACTERISTICS[1]

V_{DD} = 2.5 V to 5.5 V; all specifications T_{MIN} to T_{MAX}, unless otherwise noted.

Table 3.

Parameter[2]	Limit at T_{MIN}, T_{MAX} (B Version)	Unit	Conditions/Comments
f_{SCL}	400	kHz max	SCL clock frequency
t_1	2.5	µs min	SCL cycle time
t_2	0.6	µs min	t_{HIGH}, SCL high time
t_3	1.3	µs min	t_{LOW}, SCL low time
t_4	0.6	µs min	$t_{HD,STA}$, start/repeated start condition hold time
t_5	100	ns min	$t_{SU,DAT}$, data setup time
t_6[3]	0.9	µs max	$t_{HD,DAT}$, data hold time
	0	µs min	
t_7	0.6	µs min	$t_{SU,STA}$, setup time for repeated start
t_8	0.6	µs min	$t_{SU,STO}$, stop condition setup time
t_9	1.3	µs min	t_{BUF}, bus free time between a stop condition and a start condition
t_{10}	300	ns max	t_R, rise time of both SCL and SDA when receiving[4]
	0	ns min	May be CMOS driven
t_{11}	250	ns max	t_F, fall time of SDA when receiving[4]
	300	ns max	t_F, fall time of both SCL and SDA when transmitting[4]
	$20 + 0.1C_b$[5]	ns min	
C_b	400	pF max	Capacitive load for each bus line

[1] See Figure 2.
[2] Guaranteed by design and characterization, not production tested.
[3] A master device must provide a hold time of at least 300 ns for the SDA signal (refer to the $V_{IH\,MIN}$ of the SCL signal) in order to bridge the undefined region of SCL's falling edge.
[4] t_R and t_F measured between 0.3 V_{DD} and 0.7 V_{DD}.
[5] C_b is the total capacitance of one bus line in picofarads.

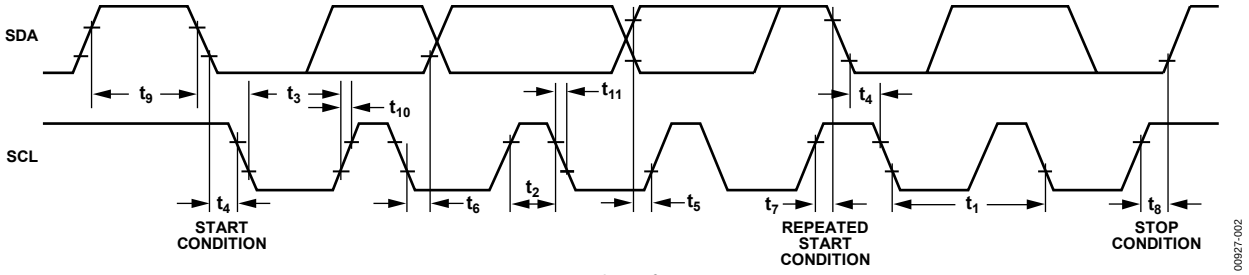

Figure 2. 2-Wire Serial Interface Timing Diagram

ABSOLUTE MAXIMUM RATINGS

T_A = 25°C, unless otherwise noted.[1]

Table 4.

Parameter	Rating
V_{DD} to GND	−0.3 V to +7 V
SCL, SDA to GND	−0.3 V to V_{DD} + 0.3 V
$\overline{PD}$, A1, A0 to GND	−0.3 V to V_{DD} + 0.3 V
V_{OUT} to GND	−0.3 V to V_{DD} + 0.3 V
Operating Temperature Range	
Industrial (B Version)	−40°C to +105°C
Storage Temperature Range	−65°C to +150°C
Junction Temperature (T_J max)	150°C
SOT-23 Package	
Power Dissipation	(T_J max – T_A)/θ_{JA}
θ_{JA} Thermal Impedance	229.6°C/W
MSOP Package	
Power Dissipation	(T_J max – T_A)/θ_{JA}
θ_{JA} Thermal Impedance	206°C/W
Lead Temperature	JEDEC Industry Standard
Soldering	J-STD-020

[1] Transient currents of up to 100 mA do not cause SCR latch-up.

Stresses above those listed under Absolute Maximum Ratings may cause permanent damage to the device. This is a stress rating only; functional operation of the device at these or any other conditions above those indicated in the operational section of this specification is not implied. Exposure to absolute maximum rating conditions for extended periods may affect device reliability.

ESD CAUTION

ESD (electrostatic discharge) sensitive device. Charged devices and circuit boards can discharge without detection. Although this product features patented or proprietary protection circuitry, damage may occur on devices subjected to high energy ESD. Therefore, proper ESD precautions should be taken to avoid performance degradation or loss of functionality.

PIN CONFIGURATIONS AND FUNCTION DESCRIPTIONS

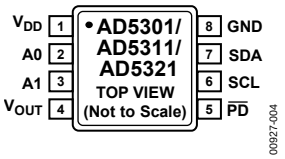

Figure 3. 8-Lead MSOP (RM-8) Pin Configuration

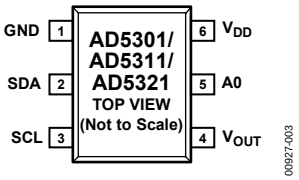

Figure 4. 6-Lead SOT-23 (RJ-6) Pin Configuration

Table 5. Pin Function Descriptions

MSOP Pin No.	SOT-23 Pin No.	Mnemonic	Description
1	6	V_{DD}	Power Supply Input. These parts can be operated from 2.5 V to 5.5 V and the supply should be decoupled with a 10 µF in parallel with a 0.1 µF capacitor to GND.
2	5	A0	Address Input. Sets the least significant bit of the 7-bit slave address.
3	N/A	A1	Address Input. Sets the second least significant bit of the 7-bit slave address.
4	4	V_{OUT}	Buffered Analog Output Voltage from the DAC. The output amplifier has rail-to-rail operation.
5	N/A	$\overline{PD}$	Active Low Control Input. Acts as a hardware power-down option. This pin overrides any software power-down option. The DAC output goes three-state and the current consumption of the part drops to 50 nA @ 3 V (200 nA @ 5 V).
6	3	SCL	Serial Clock Line. This is used in conjunction with the SDA line to clock data into the 16-bit input shift register. Clock rates of up to 400 kbps can be accommodated in the I^2C-compatible interface. SCL may be CMOS/TTL driven.
7	2	SDA	Serial Data Line. This is used in conjunction with the SCL line to clock data into the 16-bit input shift register during the write cycle and to read back one or two bytes of data (one byte for the AD5301, two bytes for the AD5311/AD5321) during the read cycle. It is a bidirectional open-drain data line that should be pulled to the supply with an external pull-up resistor. If not used in readback mode, SDA may be CMOS/TTL driven.
8	1	GND	Ground Reference Point for All Circuitry on the Part.

TERMINOLOGY

Relative Accuracy
For the DAC, relative accuracy or integral nonlinearity (INL) is a measure of the maximum deviation, in LSBs, from a straight line passing through the actual endpoints of the DAC transfer function. Typical INL vs. code plots can be seen in Figure 5 to Figure 7.

Differential Nonlinearity (DNL)
DNL is the difference between the measured change and the ideal 1 LSB change between any two adjacent codes. A specified differential nonlinearity of ±1 LSB maximum ensures monotonicity. These DACs are guaranteed monotonic by design over all codes. Typical DNL vs. code plots can be seen in Figure 8 to Figure 10.

Zero-Code Error
Zero-code error is a measure of the output error when zero code (0x00) is loaded to the DAC register. Ideally, the output should be 0 V. The zero-code error of the AD5301/AD5311/AD5321 is always positive because the output of the DAC cannot go below 0 V, due to a combination of the offset errors in the DAC and output amplifier. It is expressed in millivolts, see Figure 12.

Full-Scale Error (FSR)
Full-scale error is a measure of the output error when full scale is loaded to the DAC register. Ideally, the output should be V_{DD} – 1 LSB. Full-scale error is expressed in percent of FSR. A plot can be seen in Figure 12.

Gain Error
Gain error is a measure of the span error of the DAC. It is the deviation in slope of the actual DAC transfer characteristic from the ideal expressed as a percentage of the full-scale range.

Zero-Code Error Drift
Zero-code error drift is a measure of the change in zero-code error with a change in temperature. It is expressed in µV/°C.

Gain Error Drift
Gain error drift is a measure of the change in gain error with changes in temperature. It is expressed in (ppm of full-scale range)/°C.

Major Code Transition Glitch Energy

Major code transition glitch energy is the energy of the impulse injected into the analog output when the code in the DAC register changes state. It is normally specified as the area of the glitch in nV-s and is measured when the digital code is changed by 1 LSB at the major carry transition (011 . . . 11 to 100 . . . 00 or 100 . . . 00 to 011 . . . 11).

Digital Feedthrough
Digital feedthrough is a measure of the impulse injected into the analog output of the DAC from the digital input pins of the device, but is measured when the DAC is not being written to. It is specified in nV-s and is measured with a full-scale change on the digital input pins, that is, from all 0s to all 1s and vice versa.

TYPICAL PERFORMANCE CHARACTERISTICS

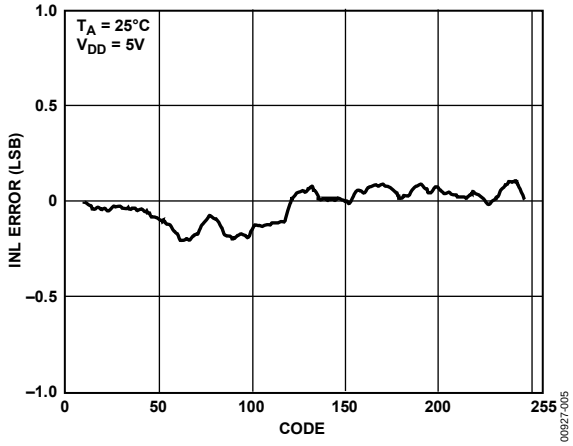

Figure 5. AD5301 Typical INL Plot

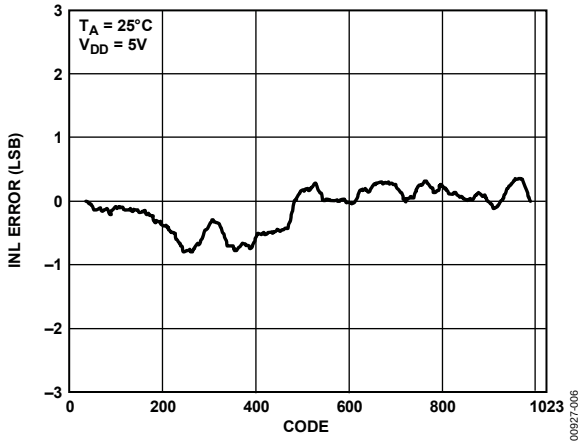

Figure 6. AD5311 Typical INL Plot

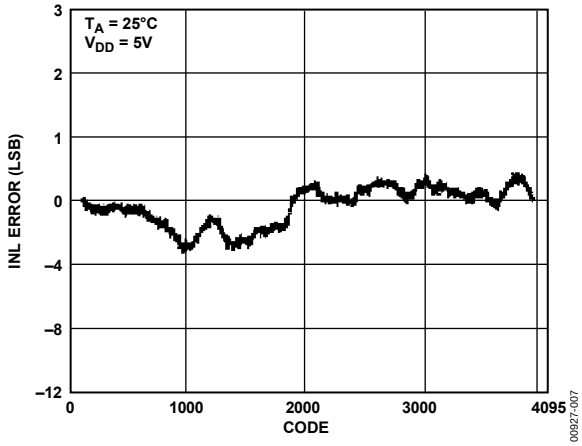

Figure 7. AD5321 Typical INL Plot

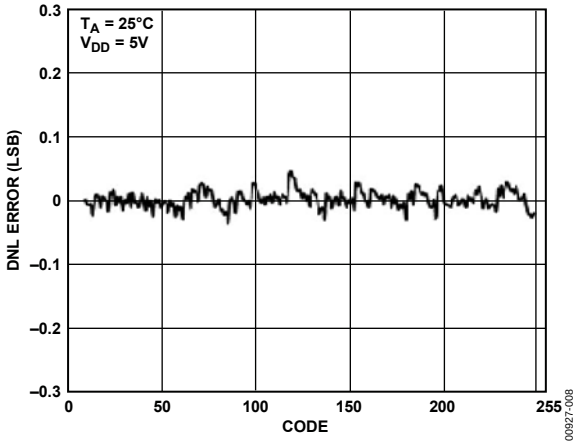

Figure 8. AD5301 Typical DNL Plot

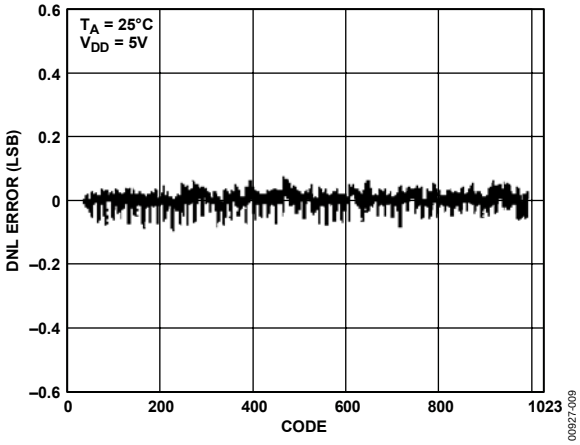

Figure 9. AD5311 Typical DNL Plot

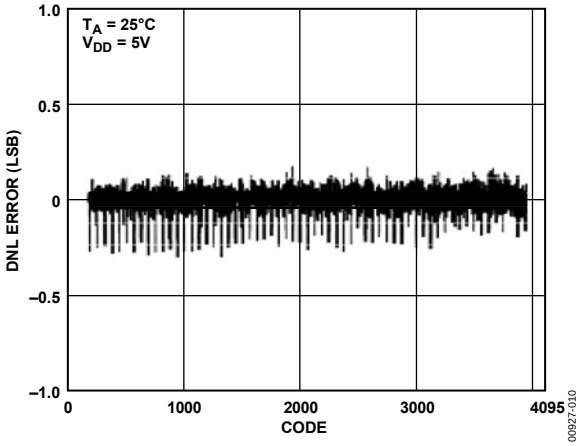

Figure 10. AD5321 Typical DNL Plot

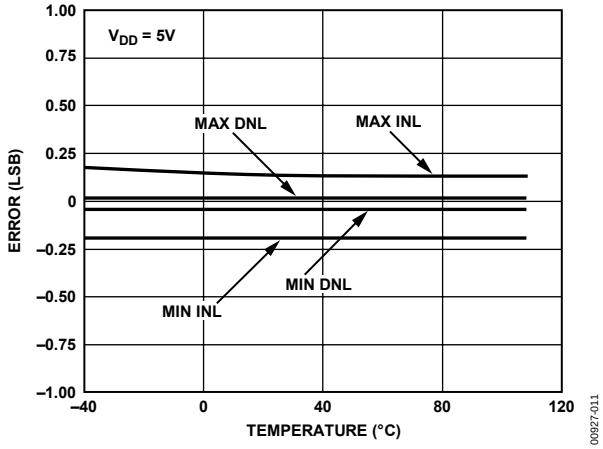

Figure 11. AD5301 INL Error and DNL Error vs. Temperature

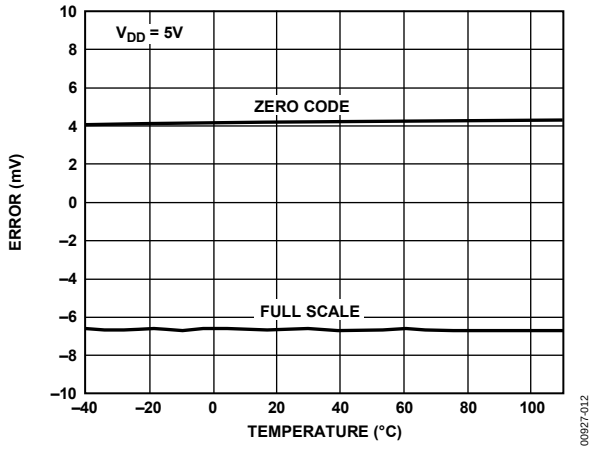

Figure 12. Zero-Code Error and Full-Scale Error vs. Temperature

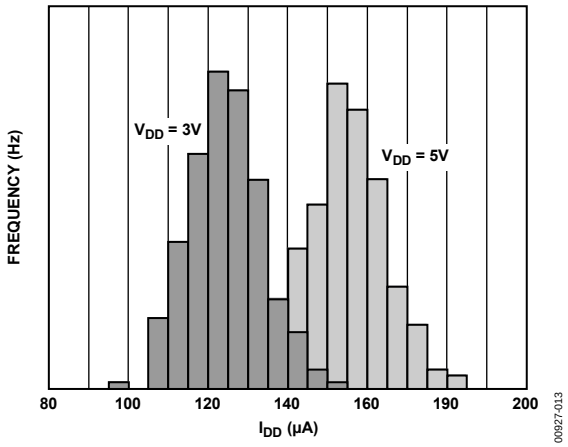

Figure 13. I_{DD} Histogram with V_{DD} = 3 V and V_{DD} = 5 V

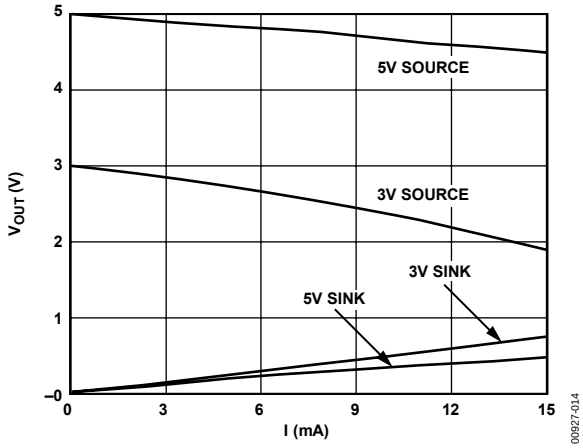

Figure 14. Source and Sink Current Capability

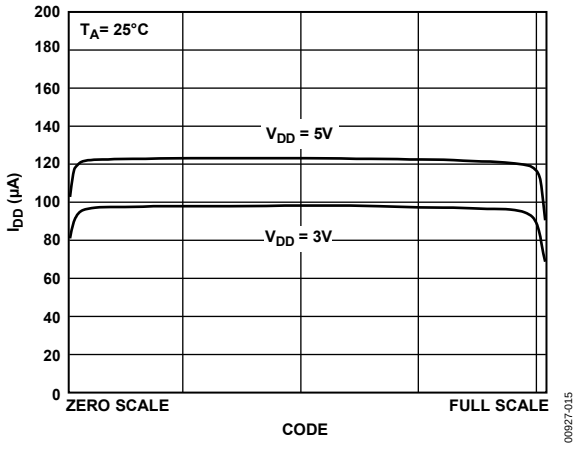

Figure 15. Supply Current vs. Code

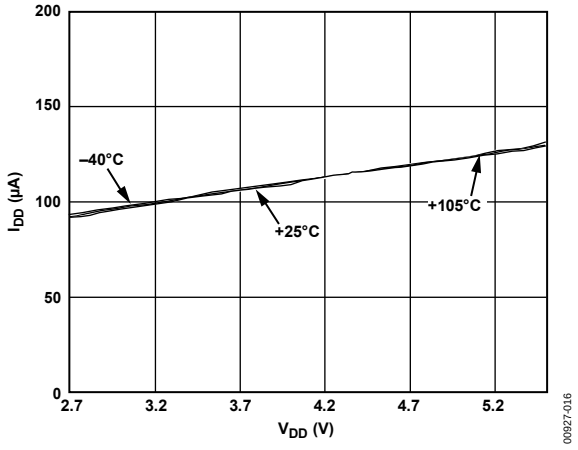

Figure 16. Supply Current vs. Supply Voltage

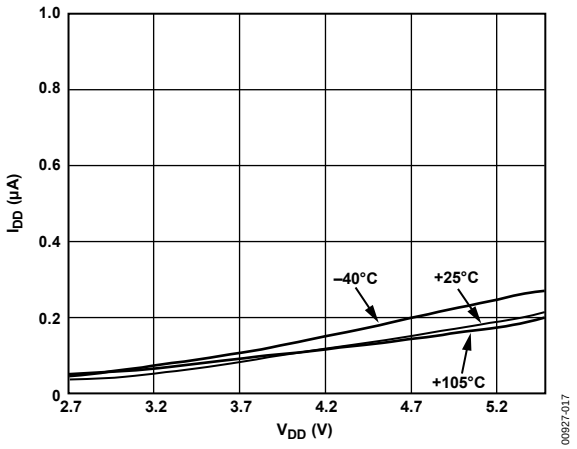

Figure 17. Power-Down Current vs. Supply Voltage

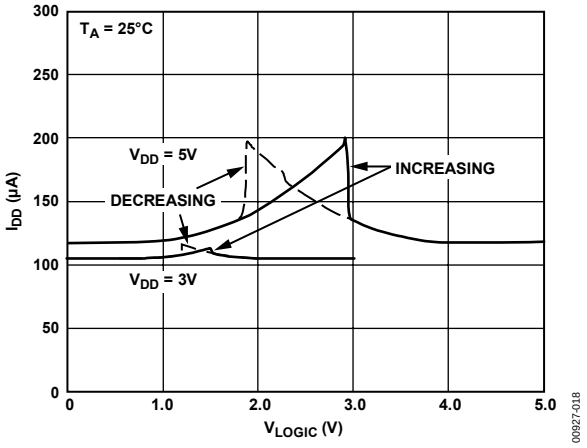

Figure 18. Supply Current vs. Logic Input Voltage for SDA and SCL Voltage Increasing and Decreasing

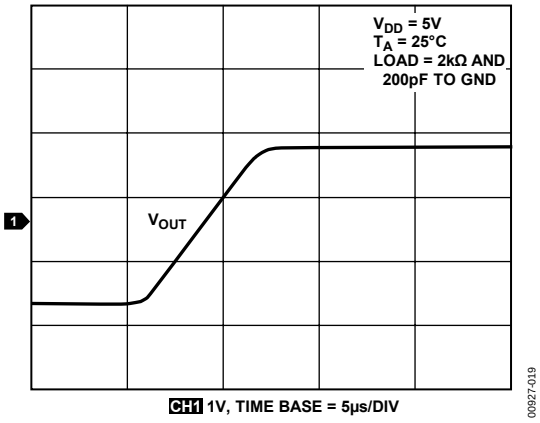

Figure 19. Half-Scale Settling (1/4 to 3/4 Scale Code Charge)

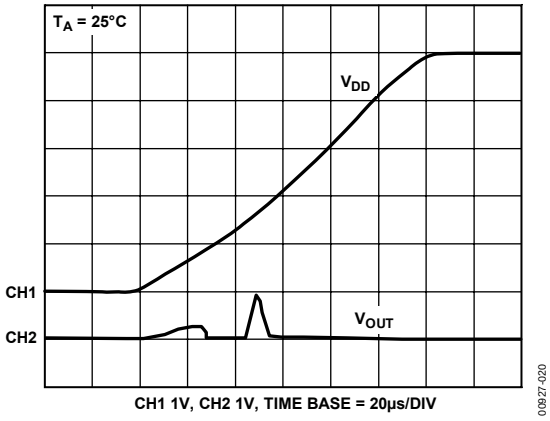

Figure 20. Power-On Reset to 0 V

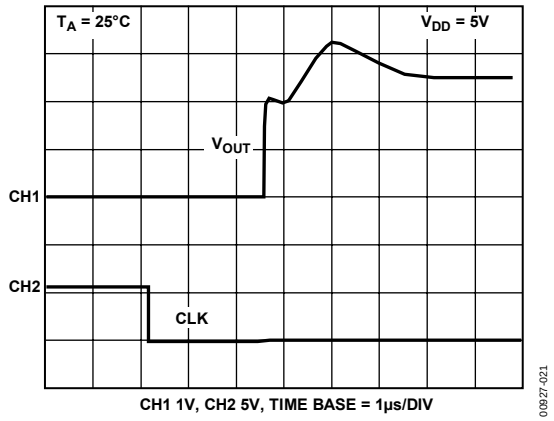

Figure 21. Exiting Power-Down to Midscale

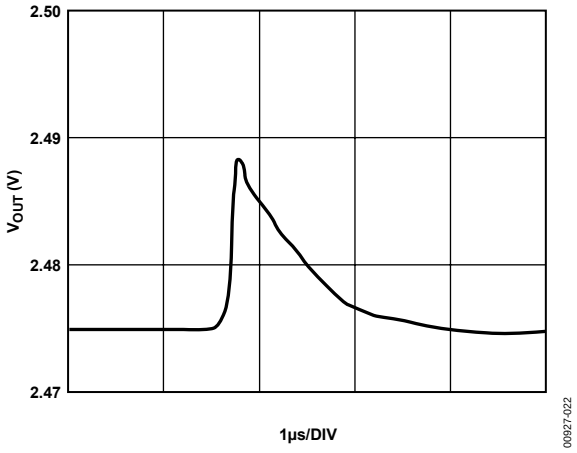

Figure 22. Major-Code Transition

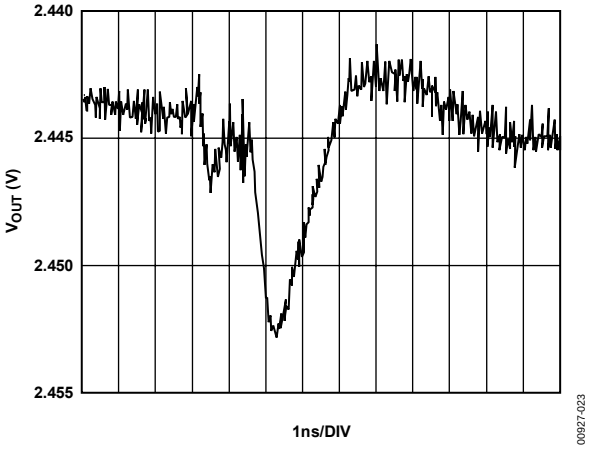

Figure 23. Digital Feedthrough

THEORY OF OPERATION

The AD5301/AD5311/AD5321 are single resistor-string DACs fabricated on a CMOS process with resolutions of 8/10/12 bits, respectively. Data is written via a 2-wire serial interface. The devices operate from single supplies of 2.5 V to 5.5 V and the output buffer amplifiers provide rail-to-rail output swing with a slew rate of 0.7 V/μs. The power supply (V_{DD}) acts as the reference to the DAC. The AD5301/AD5311/AD5321 have three programmable power-down modes, in which the DAC can be turned off completely with a high impedance output, or the output can be pulled low by an on-chip resistor (see the Power-Down Modes section).

DIGITAL-TO-ANALOG

The architecture of the DAC channel consists of a resistor string DAC followed by an output buffer amplifier. The voltage at the V_{DD} pin provides the reference voltage for the DAC. Figure 24 shows a block diagram of the DAC architecture. Since the input coding to the DAC is straight binary, the ideal output voltage is given by

$$V_{OUT} = \frac{V_{DD} \times D}{2^N}$$

where:

N = DAC resolution
D = decimal equivalent of the binary code that is loaded to the DAC register:

0–255 for AD5301 (8 bits)
0–1023 for AD5311 (10 bits)
0–4095 for AD5321 (12 bits)

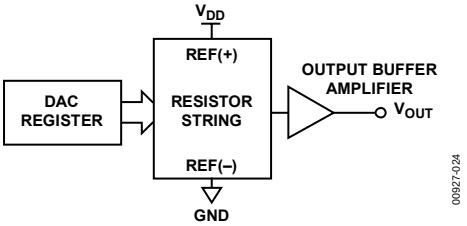

Figure 24. DAC Channel Architecture

RESISTOR STRING

The resistor string section is shown in Figure 25. It is simply a string of resistors, each with a value of R. The digital code loaded to the DAC register determines at what node on the string the voltage is tapped off to be fed into the output amplifier. The voltage is tapped off by closing one of the switches connecting the string to the amplifier. Because it is a string of resistors, it is guaranteed monotonic over all codes.

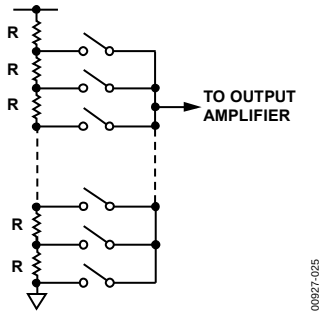

Figure 25. Resistor String

OUTPUT AMPLIFIER

The output buffer amplifier is capable of generating output voltages to within 1 mV from either rail, which gives an output range of 0.001 V to V_{DD} − 0.001 V. It is capable of driving a load of 2 kΩ to GND and V_{DD}, in parallel with 500 pF to GND. The source and sink capabilities of the output amplifier can be seen in Figure 14.

The slew rate is 0.7 V/μs with a half-scale settling time to ±0.5 LSB (at 8 bits) of 6 μs with the output unloaded.

POWER-ON RESET

The AD5301/AD5311/AD5321 are provided with a power-on reset function, ensuring that they power up in a defined state.

The DAC register is filled with zeros and remains so until a valid write sequence is made to the device. This is particularly useful in applications where it is important to know the state of the DAC output while the device is powering up.

SERIAL INTERFACE

2-WIRE SERIAL BUS

The AD5301/AD5311/AD5321 are controlled via an I²C-compatible serial bus. The DACs are connected to this bus as slave devices (no clock is generated by the AD5301/AD5311/AD5321 DACs).

The AD5301/AD5311/AD5321 has a 7-bit slave address. In the case of the 6-lead device, the six MSBs are 000110 and the LSB is determined by the state of the A0 pin. In the case of the 8-lead device, the five MSBs are 00011 and the two LSBs are determined by the state of the A0 and A1 pins. A1 and A0 allow the user to use up to four of these DACs on one bus.

The 2-wire serial bus protocol operates as follows:

1. The master initiates data transfer by establishing a start condition, which is when a high-to-low transition on the SDA line occurs while SCL is high. The following byte is the address byte that consists of the 7-bit slave address followed by an R/$\overline{W}$ bit (this bit determines whether data is read from or written to the slave device).

   The slave whose address corresponds to the transmitted address responds by pulling the SDA line low during the ninth clock pulse (this is termed the acknowledge bit). At this stage, all other devices on the bus remain idle while the selected device waits for data to be written to or read from its serial register. If the R/$\overline{W}$ bit is high, the master reads from the slave device. However, if the R/$\overline{W}$ bit is low, the master writes to the slave device.

2. Data is transmitted over the serial bus in sequences of nine clock pulses (eight data bits followed by an acknowledge bit). The transitions on the SDA line must occur during the low period of SCL and remain stable during the high period of SCL.

3. When all data bits have been read or written, a stop condition is established by the master. A stop condition is defined as a low-to-high transition on the SDA line while SCL is high. In write mode, the master pulls the SDA line high during the 10th clock pulse to establish a stop condition. In read mode, the master issues a no acknowledge for the ninth clock pulse (that is, the SDA line remains high). The master then brings the SDA line low before the 10th clock pulse and then high during the 10th clock pulse to establish a stop condition.

In the case of the AD5301/AD5311/AD5321, a write operation contains two bytes whereas a read operation may contain one or two bytes. See Figure 29 to Figure 34 for a graphical explanation of the serial interface.

A repeated write function gives the user flexibility to update the DAC output a number of times after addressing the part only once. During the write cycle, each multiple of two data bytes updates the DAC output. For example, after the DAC acknowledges its address byte, and receives two data bytes; the DAC output updates after the two data bytes, if another two data bytes are written to the DAC while it is still the addressed slave device. These data bytes also cause an output update. A repeat read of the DAC is also allowed.

INPUT SHIFT REGISTER

The input shift register is 16 bits wide. Figure 26, Figure 27, and Figure 28 illustrate the contents of the input shift register for each part. Data is loaded into the device as a 16-bit word under the control of a serial clock input, SCL. The timing diagram for this operation is shown in Figure 2. The 16-bit word consists of four control bits followed by 8/10/12 bits of data, depending on the device type. MSB (Bit 15) is loaded first. The first two bits are don't cares. The next two are control bits that control the mode of operation of the device (normal mode or any one of three power-down modes). See the Power-Down Modes section for a complete description. The remaining bits are left justified DAC data bits, starting with the MSB and ending with the LSB.

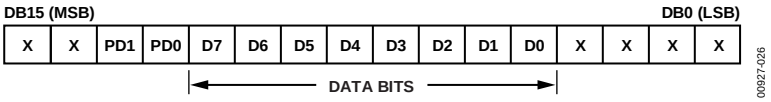

Figure 26. AD5301 Input Shift Register Contents

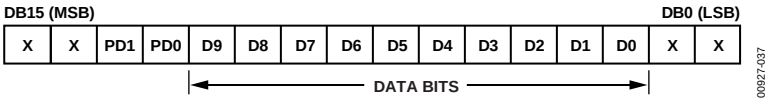

Figure 27. AD5311 Input Shift Register Contents

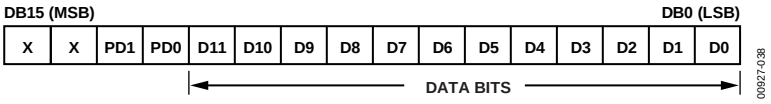

Figure 28. AD5321 Input Shift Register Contents

WRITE OPERATION

When writing to the AD5301/AD5311/AD5321 DACs, the user must begin with an address byte, after which the DAC acknowledges that it is prepared to receive data by pulling SDA low. This address byte is followed by the 16-bit word in the form of two control bytes. The write operations for the three DACs are shown in Figure 29 to Figure 31.

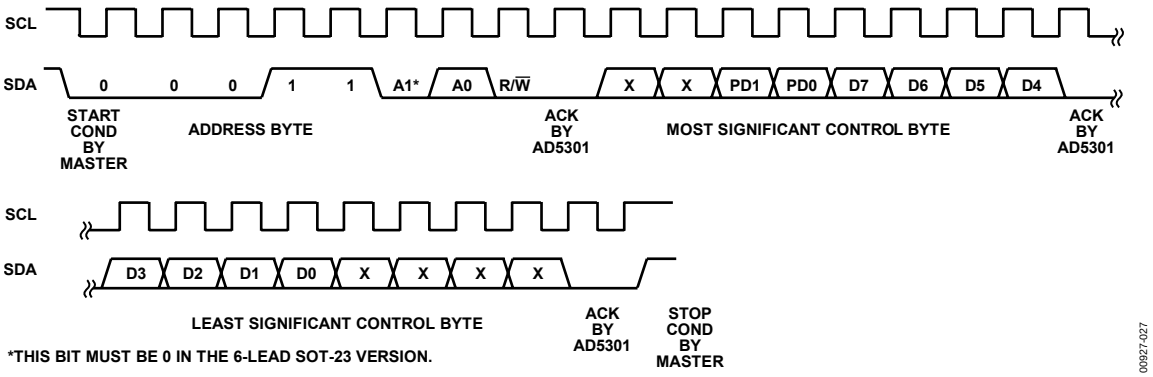

Figure 29. AD5301 Write Sequence

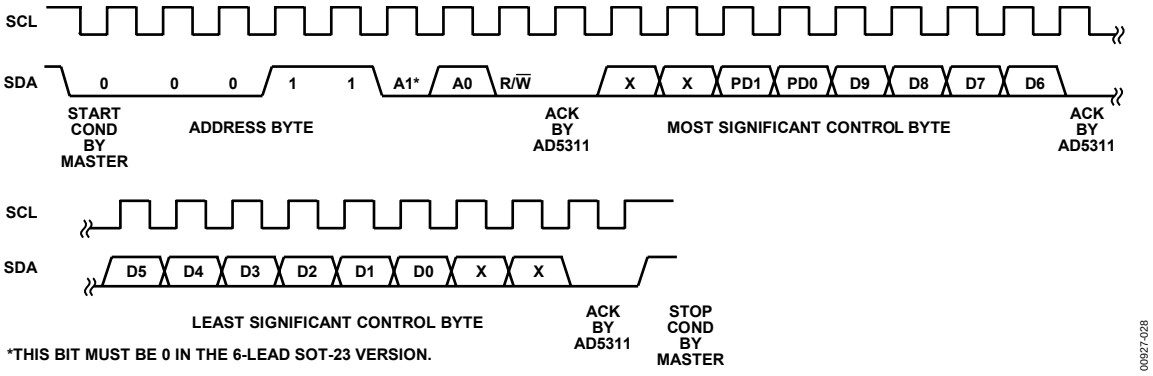

Figure 30. AD5311 Write Sequence

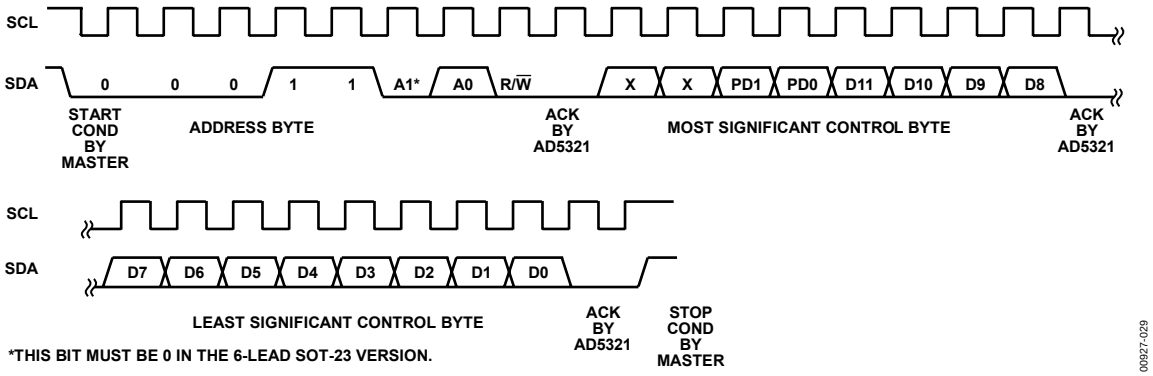

Figure 31. AD5321 Write Sequence

READ OPERATION

When reading data back from the AD5301/AD5311/AD5321 DACs, the user must begin with an address byte after which the DAC acknowledges that it is prepared to transmit data by pulling SDA low. There are two different read operations. In the case of the AD5301, the readback is a single byte that consists of the eight data bits in the DAC register. However, in the case of the AD5311 and AD5321, the readback consists of two bytes that contain both the data and the power-down mode bits. The read operations for the three DACs are shown in Figure 32 to Figure 34.

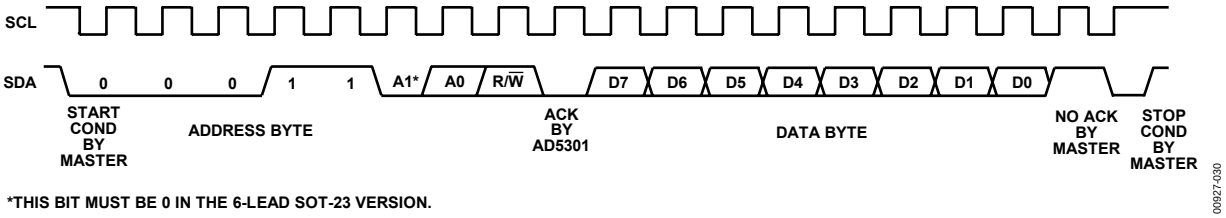

Figure 32. AD5301 Readback Sequence

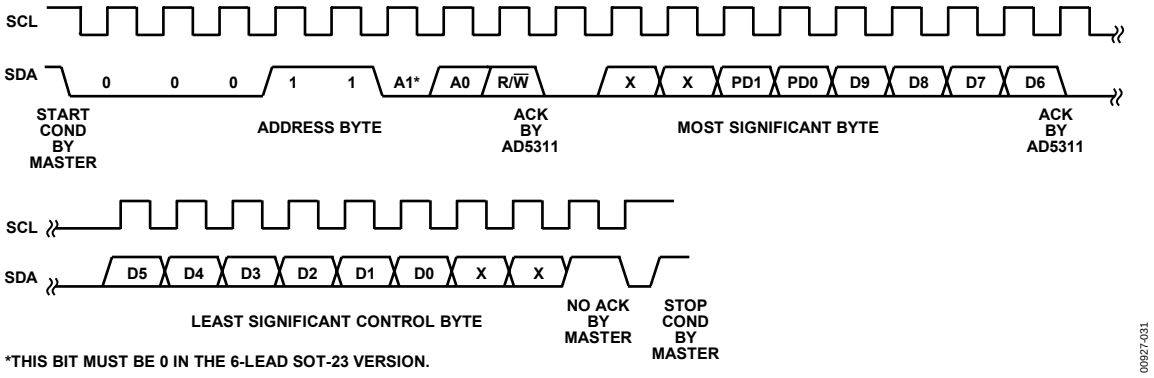

Figure 33. AD5311 Readback Sequence

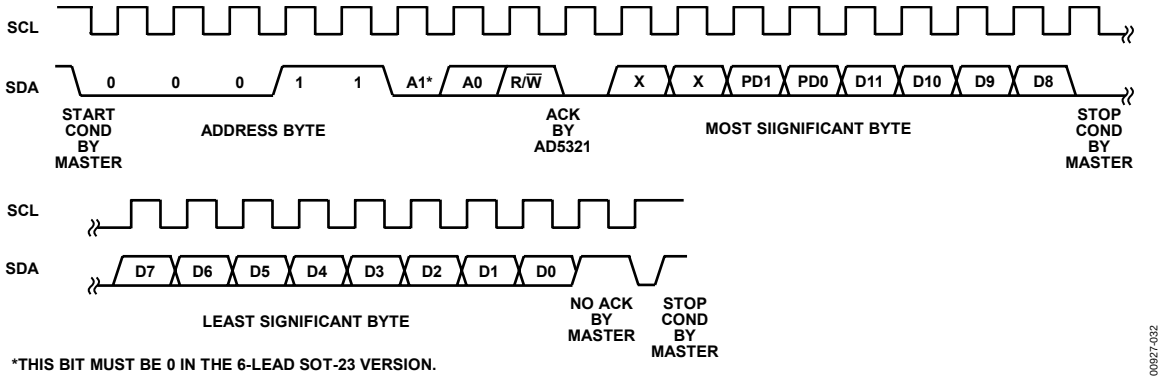

Figure 34. AD5321 Readback Sequence

POWER-DOWN MODES

The AD5301/AD5311/AD5321 have very low power consumption, dissipating typically 0.36 mW with a 3 V supply and 0.75 mW with a 5 V supply. Power consumption can be further reduced when the DAC is not in use by putting it into one of three power-down modes, which are selected by Bit 13 and Bit 12 (PD1 and PD0) of the control word. Table 6 shows how the state of the bits corresponds to the mode of operation of the DAC.

Table 6. PD1 and PD0 Operating Modes

PD1	PD0	Operating Mode
0	0	Normal operation
0	1	Power-down (1 kΩ load to GND)
1	0	Power-down (100 kΩ load to GND)
1	1	Power-down (three-state output)

The software power-down modes programmed by PD1 and PD0 may be overridden by the $\overline{PD}$ pin on the 8-lead version. Taking this pin low puts the DAC into three-state power-down mode. If $\overline{PD}$ is not used, tie it high.

When both bits are set to 0, the DAC works normally with its normal power consumption of 150 μA at 5 V, while for the three power-down modes, the supply current falls to 200 nA at 5 V (50 nA at 3 V). Not only does the supply current drop, but the output stage is also internally switched from the output of the amplifier to a resistor network of known values. This has the advantage that the output impedance of the part is known while the part is in power-down mode and provides a defined input condition for whatever is connected to the output of the DAC amplifier. There are three different options. The output is connected internally to GND through a 1 kΩ resistor, a 100 kΩ resistor, or it is left three-stated. Resistor tolerance = ±20%. The output stage is illustrated in Figure 35.

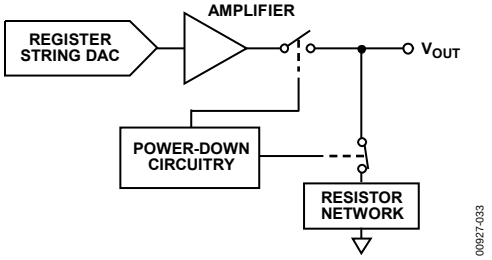

Figure 35. Output Stage During Power-Down

The bias generator, the output amplifier, the resistor string, and all other associated linear circuitry are shut down when the power-down mode is activated. However, the contents of the DAC register are unchanged when in power-down. The time to exit power-down is typically 2.5 μs for V_{DD} = 5 V and 6 μs when V_{DD} = 3 V (see Figure 21).

APPLICATIONS NOTES

USING REF19x AS A POWER SUPPLY

Because the supply current required by the AD5301/AD5311/AD5321 is extremely low, the user has an alternative option to employ a REF195 voltage reference (for 5 V) or a REF193 voltage reference (for 3 V) to supply the required voltage to the part (see Figure 36).

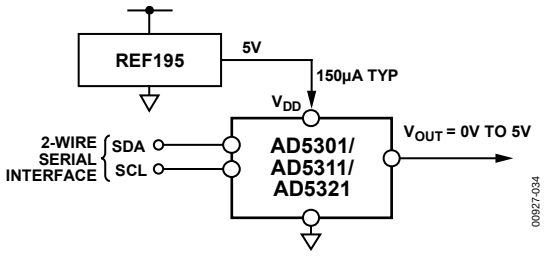

Figure 36. REF195 as Power Supply to AD5301/AD5311/AD5321

This is especially useful if the power supply is quite noisy or if the system supply voltages are at some value other than 5 V or 3 V (for example, 15 V). The REF193/REF195 output a steady supply voltage for the AD5301/AD5311/AD5321. If the low dropout REF195 is used, it needs to supply a current of 150 µA to the AD5301/AD5311/AD5321. This is with no load on the output of the DAC. When the DAC output is loaded, the REF195 also needs to supply the current to the load.

The total current required (with a 2 kΩ load on the DAC output and full scale loaded to the DAC) is

$$150\ \mu A + (5\ V/2\ k\Omega) = 2.65\ mA$$

The load regulation of the REF195 is typically 2 ppm/mA, which results in an error of 5.3 ppm (26.5 µV) for the 2.65 mA current drawn from it. This corresponds to a 0.00136 LSB error.

BIPOLAR OPERATION USING THE AD5301/AD5311/AD5321

The AD5301/AD5311/AD5321 has been designed for single-supply operation, but a bipolar output range is also possible using the circuit in Figure 37. The circuit below gives an output voltage range of ±5 V. Rail-to-rail operation at the amplifier output is achievable using an AD820 or an OP295 as the output amplifier.

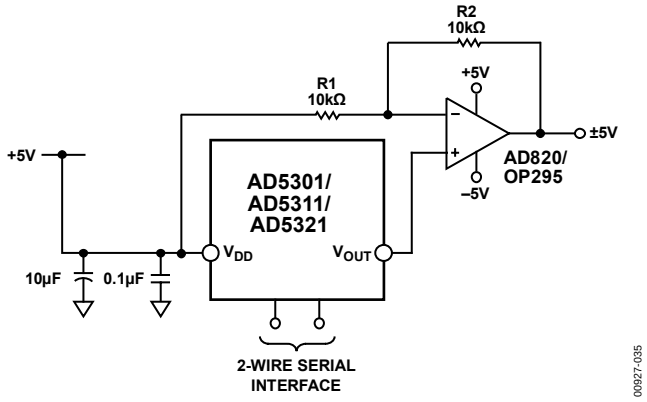

Figure 37. Bipolar Operation with the AD5301/AD5311/AD5321

The output voltage for any input code can be calculated as

$$V_{OUT} = [(V_{DD} \times (D/2^N) \times R1 + R2)/R1) - V_{DD} \times (R2/R1)]$$

where:

D is the decimal equivalent of the code loaded to the DAC.
N is the DAC resolution.

With V_{DD} = 5 V, $R1 = R2$ = 10 kΩ,

$$V_{OUT} = (10 \times D/2^N) - 5\ V$$

MULTIPLE DEVICES ON ONE BUS

Figure 38 shows four AD5301 devices on the same serial bus. Each has a different slave address since the state of their A0 and A1 pins is different. This allows each DAC to be written to or read from independently. The master device output bus line drivers are open-drain, pull-downs in a fully I²C-compatible interface.

CMOS DRIVEN SCL AND SDA LINES

For single or multisupply systems where the minimum SCL swing requirements allow it, a CMOS SCL driver may be used, and the SCL pull-up resistor can be removed, making the SCL bus line fully CMOS compatible. This reduces power consumption in both the SCL driver and receiver devices. The SDA line remains open-drain, I²C compatible.

Further changes, in the SDA line driver, may be made to make the system more CMOS compatible and save more power. As the SDA line is bidirectional, it cannot be made fully CMOS compatible. A switched pull-up resistor can be combined with a CMOS device with an open-circuit (three-state) input such that the CMOS SDA driver is enabled during write cycles and I²C mode is enabled during shared cycles, that is, readback, acknowledge bit cycles, start conditions, and stop conditions.

POWER SUPPLY DECOUPLING

In any circuit where accuracy is important, careful consideration of the power supply and ground return layout helps to ensure the rated performance. The AD5301/AD5311/AD5321 should be decoupled to GND with 10 μF in parallel with a 0.1 μF capacitor, located as close to the package as possible. The 10 μF capacitor should be the tantalum bead type, while a ceramic 0.1 μF capacitor provides a sufficient low impedance path to ground at high frequencies. The power supply lines of the AD5301/AD5311/AD5321 should use as large a trace as possible to provide low impedance paths. A ground line routed between the SDA and SCL lines helps reduce crosstalk between them. This is not required on a multilayer board as there is a ground plane layer, but separating the lines helps.

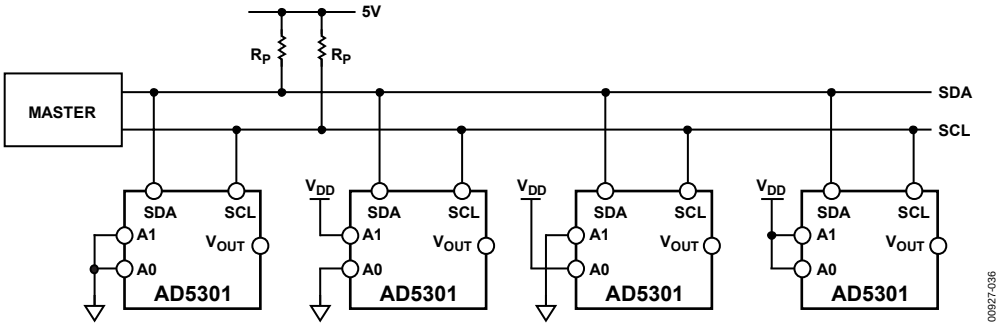

Figure 38. Multiple AD5301 Devices on One Bus

OUTLINE DIMENSIONS

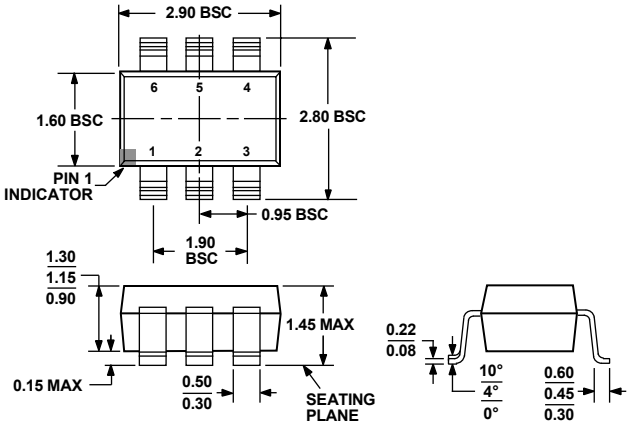

COMPLIANT TO JEDEC STANDARDS MO-178-AB

Figure 39. 6-Lead Small Outline Transistor Package [SOT-23] (RJ-6)
Dimensions shown in millimeters

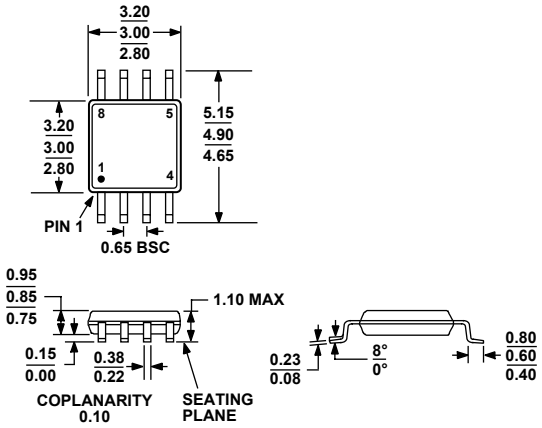

COMPLIANT TO JEDEC STANDARDS MO-187-AA

Figure 40. 8-Lead Mini Small Outline Package [MSOP] (RM-8)
Dimensions shown in millimeters

ORDERING GUIDE

Model	Temperature Range	Package Description	Package Option	Branding
AD5301BRM	–40°C to +105°C	8-Lead MSOP	RM-8	D8B
AD5301BRM-REEL	–40°C to +105°C	8-Lead MSOP	RM-8	D8B
AD5301BRM-REEL7	–40°C to +105°C	8-Lead MSOP	RM-8	D8B
AD5301BRMZ[1]	–40°C to +105°C	8-Lead MSOP	RM-8	D8B#
AD5301BRMZ-REEL[1]	–40°C to +105°C	8-Lead MSOP	RM-8	D8B#
AD5301BRMZ-REEL7[1]	–40°C to +105°C	8-Lead MSOP	RM-8	D8B#
AD5301BRT-500RL7	–40°C to +105°C	6-Lead SOT-23	RJ-6	D8B
AD5301BRT-REEL	–40°C to +105°C	6-Lead SOT-23	RJ-6	D8B
AD5301BRT-REEL7	–40°C to +105°C	6-Lead SOT-23	RJ-6	D8B
AD5301BRTZ-500RL7[1]	–40°C to +105°C	6-Lead SOT-23	RJ-6	D8B#
AD5301BRTZ-REEL[1]	–40°C to +105°C	6-Lead SOT-23	RJ-6	D8B#
AD5301BRTZ-REEL7[1]	–40°C to +105°C	6-Lead SOT-23	RJ-6	D8B#
AD5311BRM	–40°C to +105°C	8-Lead MSOP	RM-8	D9B
AD5311BRM-REEL	–40°C to +105°C	8-Lead MSOP	RM-8	D9B
AD5311BRM-REEL7	–40°C to +105°C	8-Lead MSOP	RM-8	D9B
AD5311BRMZ[1]	–40°C to +105°C	8-Lead MSOP	RM-8	D9B#
AD5311BRMZ-REEL[1]	–40°C to +105°C	8-Lead MSOP	RM-8	D9B#
AD5311BRMZ-REEL7[1]	–40°C to +105°C	8-Lead MSOP	RM-8	D9B#
AD5311BRT-500RL7	–40°C to +105°C	6-Lead SOT-23	RJ-6	D9B
AD5311BRT-REEL	–40°C to +105°C	6-Lead SOT-23	RJ-6	D9B
AD5311BRT-REEL7	–40°C to +105°C	6-Lead SOT-23	RJ-6	D9B
AD5311BRTZ-500RL7[1]	–40°C to +105°C	6-Lead SOT-23	RJ-6	D9B#
AD5311BRTZ-REEL[1]	–40°C to +105°C	6-Lead SOT-23	RJ-6	D9B#
AD5311BRTZ-REEL7[1]	–40°C to +105°C	6-Lead SOT-23	RJ-6	D9B#
AD5321BRM	–40°C to +105°C	8-Lead MSOP	RM-8	DAB
AD5321BRM-REEL	–40°C to +105°C	8-Lead MSOP	RM-8	DAB
AD5321BRM-REEL7	–40°C to +105°C	8-Lead MSOP	RM-8	DAB
AD5321BRMZ[1]	–40°C to +105°C	8-Lead MSOP	RM-8	DAB#
AD5321BRMZ-REEL[1]	–40°C to +105°C	8-Lead MSOP	RM-8	DAB#
AD5321BRMZ-REEL7[1]	–40°C to +105°C	8-Lead MSOP	RM-8	DAB#
AD5321BRT-500RL7	–40°C to +105°C	6-Lead SOT-23	RJ-6	DAB
AD5321BRT-REEL	–40°C to +105°C	6-Lead SOT-23	RJ-6	DAB
AD5321BRT-REEL7	–40°C to +105°C	6-Lead SOT-23	RJ-6	DAB
AD5321BRTZ-500RL7[1]	–40°C to +105°C	6-Lead SOT-23	RJ-6	DAB#
AD5321BRTZ-REEL[1]	–40°C to +105°C	6-Lead SOT-23	RJ-6	DAB#
AD5321BRTZ-REEL7[1]	–40°C to +105°C	6-Lead SOT-23	RJ-6	DAB#

[1] Z = RoHS Compliant Part; # denotes RoHS Compliant product, may be top or bottom marked.

NOTES

NOTES

NOTES

Purchase of licensed I²C components of Analog Devices or one of its sublicensed Associated Companies conveys a license for the purchaser under the Philips I²C Patent Rights to use these components in an I²C system, provided that the system conforms to the I²C Standard Specification as defined by Philips.

©1999–2007 Analog Devices, Inc. All rights reserved. Trademarks and registered trademarks are the property of their respective owners.
D00927-0-3/07(B)

ANALOG DEVICES

www.analog.com