HANDBOOK OF ACOUSTIC SIGNAL PROCESSING

VOL. IV

FIFTH
EDITION

SAW Hybrid Oscillators

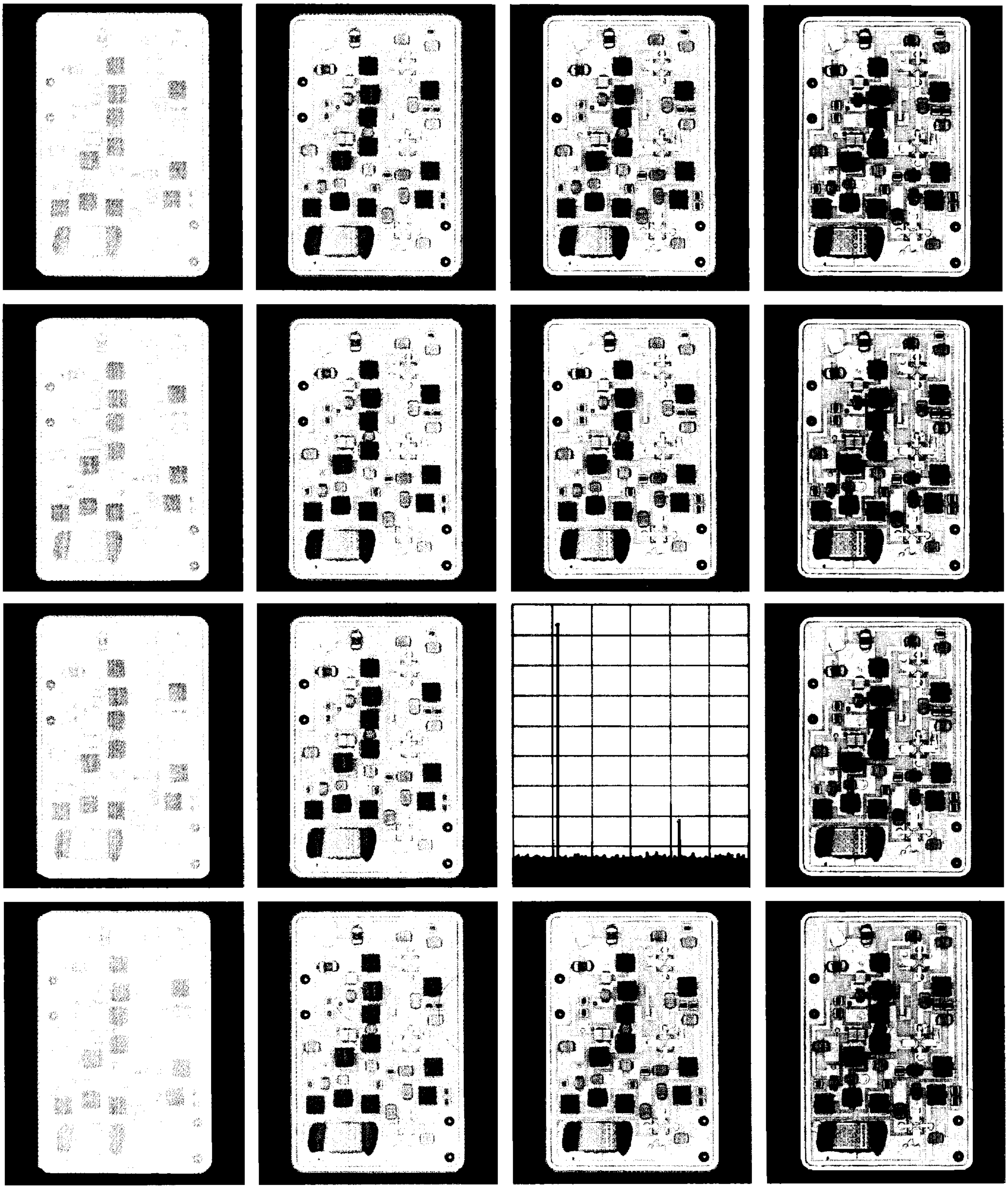

ANDERSEN LABORATORIES

Introduction

Andersen Surface Acoustic Wave (SAW) Oscillators have been developed in response to an increasing demand for compact, stable, and high performance sources in the high frequency range. These SAW oscillators are capable of operating at fundamental frequencies in the VHF, UHF range and beyond, reducing or eliminating the need for frequency multipliers and post multiplier filtering. As a result, the oscillator is a compact, low phase-noise frequency source requiring only a fraction of the space of other techniques.

KEY FEATURES INCLUDE:

- Operating Frequencies from 100 MHz to >2.6GHz
- Low Phase Noise
- Compact Size
- No Alignment Necessary
- Good Frequency Stability
- Rugged Construction
- Fixed Frequency or Voltage Controlled

With this combination of features, Andersen SAW oscillators are ideal cost effective sources for a wide range of military and commercial applications, including radio communications, telemetry, IFF, radar and satellite communications.

Andersen SAW oscillators use a planar SAW device as the frequency controlling element, incorporated into a standard hybrid electronics circuit. This approach results in an integrated package with the inherent high reliability derived from both technologies.

Use of a SAW device with hybrid electronics takes advantage of many design capabilities. SAW devices are computer designed to optimize a variety of oscillator requirements. To complete the oscillator, the SAW is then integrated into a standard hybrid circuit, which is also designed to accommodate voltage controlled (VCO) applications. These design capabilities allow the oscillator to be standardized over a wide range of fixed and tuneable requirements.

Due to the rigid construction techniques of the SAW/hybrid approach, Andersen's SAW oscillator is characteristically a rugged device, enabling it to meet a wide range of environmental requirements.

Use of surface acoustic wave technology to produce an oscillator is a natural extension of Andersen's expertise in the field. Since the early 1970's Andersen has been producing SAW components which include filters, delay lines, frequency dispersive devices, and convolvers as well as a variety of other products which integrate SAW devices.

FIGURE 1a Andersen Hybrid SAW Oscillators

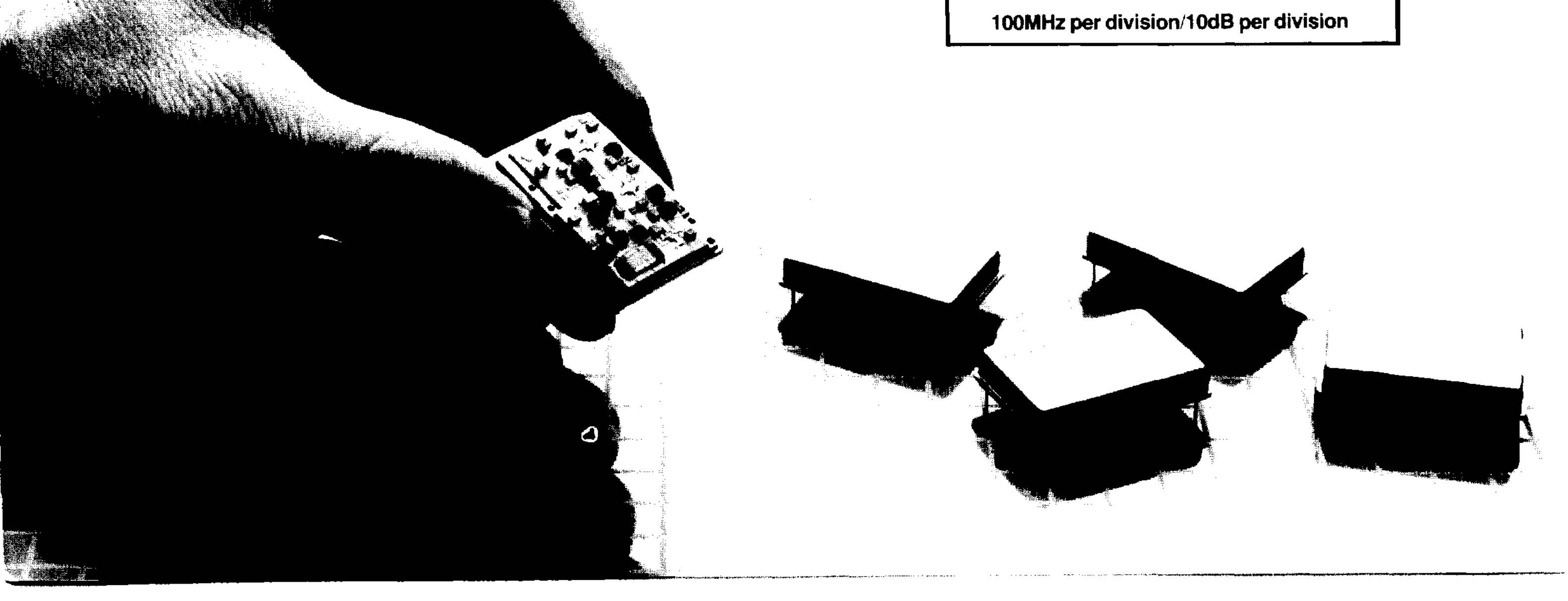

FIGURE 1b Output Frequency Spectrum

100MHz per division/10dB per division

Description

The basic SAW oscillator utilizes a SAW device as the frequency controlling element in the feedback loop of an amplifier. The device can be a delay line or a resonator, depending upon the desired characteristics. Andersen's standard oscillator utilizes the SAW delay line approach which allows for frequency modulation capability and versatility of design over a wide range of requirements.

A standard Andersen SAW delay line oscillator is shown in Figure 2a. The SAW delay line is fabricated on a temperature stable quartz substrate to achieve temperature stability and device reproducibility. The low noise amplifier provides sufficient gain in the loop for sustained oscillation under all operating conditions. The oscillator signal is coupled out of the loop by a power divider and further isolated from the load by the output amplifier.
This combination minimizes load pulling. The amplifier is selected for its reverse isolation and output power capability.

The delay line is specifically designed to set the fundamental operating frequency of the loop and provide the necessary phase noise characteristics for VCO requirements. The basic loop constraints for sustained oscillation relate to the phase-amplitude characteristics of the loop:

1. The overall gain of the loop is ≥ 1

   $G_{loop} = G_A + (-G_{D/L}) \geq 1$

2. The phase shift around the loop is an integral number of 2π radians (360°).

   $\phi_{loop} = \phi_T + \phi_A = 2\pi n \ (n = 1, 2, 3, \ldots \text{etc.})$

The oscillator will support a comb of output frequencies as shown in Figure 2b. The output frequencies that satisfy the loop equations are governed by the feedback delay τ, the phase shift due to ϕ_A, and the integer n.

$f(\tau, \phi) = \frac{1}{\tau}\left(n - \frac{\phi_A}{2\pi}\right)$. For phase shifts ϕ_A which are a small fraction of 360°, the frequencies are spaced at nearly $\frac{n}{\tau}$,(n = 1, 2, 3, . . . etc.) as shown. Limiting the oscillator output to a required frequency is also provided for by the delay line. (See "Mode-Selection.")

FIGURE 2a Block Diagram of SAW Delay Line Oscillator

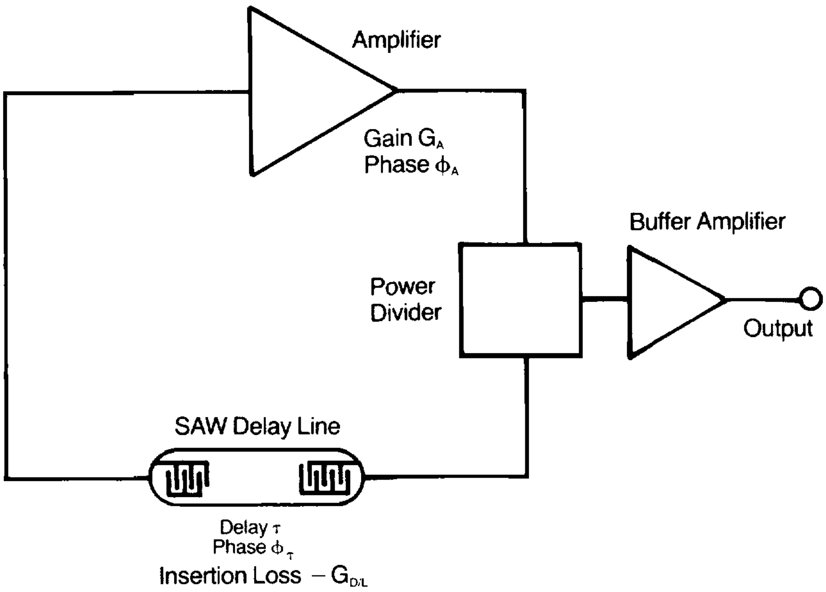

τ = absolute delay time of the SAW delay line.

ϕ_T = insertion phase of delay line equal to $\omega \times \tau$ where $\omega = 2\pi f$

$-G_{D/L}$ = insertion loss of the SAW delay line.

G_A = amplifier gain.

ϕ_A = phase shift due to amplifier and loop electronics.

FIGURE 2b

Diagram of Oscillator Output

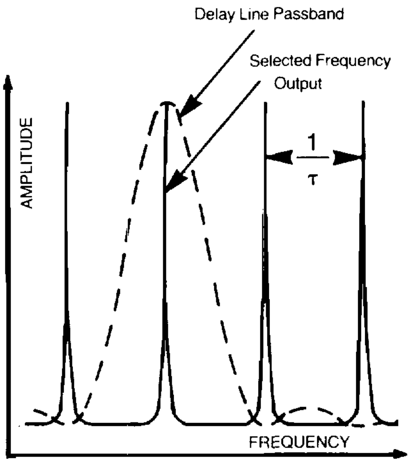

The SAW Delay Line

The delay line is the key element of the oscillator because it controls the frequency of oscillation, tuning bandwidth, and stability of the overall device. Furthermore, surface wave technology offers flexibility of design for optimizing the delay line in each oscillator application. Characteristics such as operating frequency, phase and amplitude response, stability and even mode selection can be independently determined in the design of the surface wave transducer structures.

As shown in Figure 3, electrodes or finger elements are used to form the interdigital transducers (IDT's) which launch and receive the surface acoustic waves (SAW's). The frequency generated by the SAW transducers is determined by the physical spacing (λ_a) of the individual elements.

Delay time (τ) which controls the oscillator output frequencies is determined by the spacing between IDT's and the acoustic velocity according to: $\tau = \frac{L}{\upsilon_a}$. The delay time is fixed by design and is constant with frequency over the delay line passband. Phase is a function of both delay and frequency ($\Delta\phi = \tau\Delta f$) and is therefore linear by design. The substrate which supports the propagation of the surface or acoustic waves is a specific cut of quartz chosen for its low temperature coefficient.

The amplitude characteristics of the SAW are determined by the architecture of the IDT structures. Using computer-aided design techniques, the frequency response of the surface acoustic wave transducers is predictable and straightforward, thus allowing a SAW delay line to be optimized for each oscillator.

FIGURE 3 Illustration of SAW Delay Line

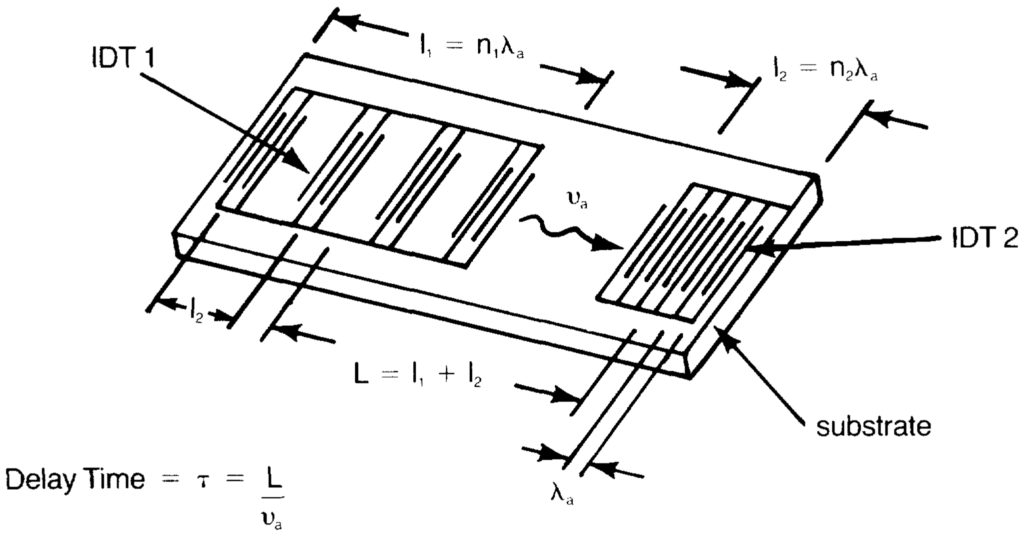

$$\text{Delay Time} = \tau = \frac{L}{\upsilon_a}$$

τ = delay time

υ_a = acoustic velocity

λ_a = acoustic wavelength

$= \frac{\text{acoustic velocity}}{\text{desired frequency}} = \frac{\upsilon_a}{f_0}$

L = center line distance between IDT's

n_1, n_2 = integers

Mode Selection

A basic delay line oscillator has multiple output frequencies. As most applications require a single output frequency, some form of mode selection must be used. An example of a commonly used configuration is shown in the delay line of Figure 3. Other configurations of delay line mode suppression are also possible.

The uniformly-structured IDT #2 works in conjunction with the longer ladder-type structured IDT #1 to produce a combined response that will suppress unwanted modes. The ladder-type IDT produces multiple outputs of a desired characteristic whereas the uniform IDT is used as a filter to select one desired output and suppress the others.

The resultant frequency response depends upon the number of acoustic wave lengths ($n\lambda$) designed into the time domain of the IDT structures. Figures 4a and 4b show the individual IDT responses and the overall delay line response. A SAW delay line is designed for each oscillator requirement to limit oscillation in the loop to the required output frequency.

FIGURE 4a **Individual IDT Responses**

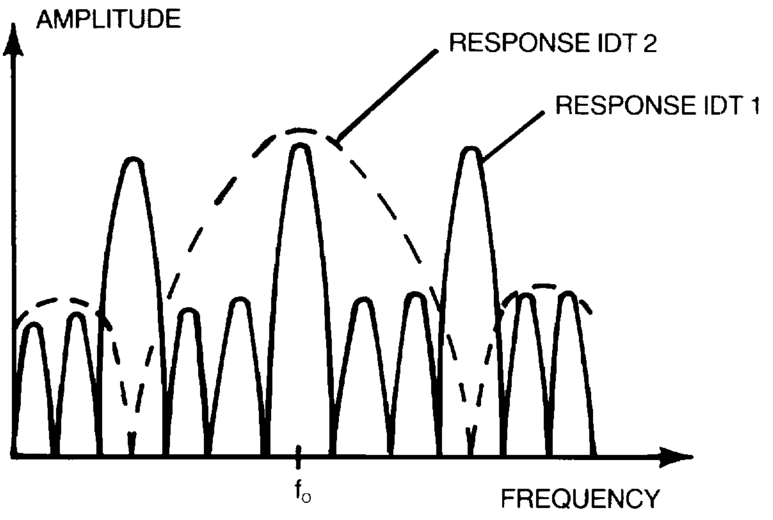

FIGURE 4b **Composite IDT Response**

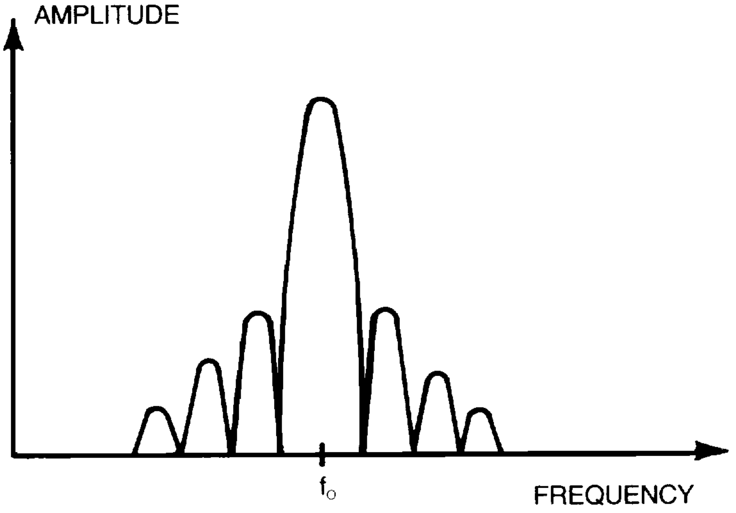

SAW Voltage Controlled Oscillator (VCO)

By introducing a predictable phase shift into the feedback loop of the amplifier, the frequency of oscillation can be varied (pulled) from its center frequency over some specified operating range. To satisfy the basic loop phase relationship:

$$\phi_T + \phi_S(v) + \phi_A = 2\pi n$$

The phase of the delay line is frequency dependent according to

$\phi_T = \omega\tau = 2\pi f\tau$ where τ is a fixed delay. Substituting ϕ_T into the phase equation, the frequency may then be expressed as

$$f(\phi,\tau) = \frac{n}{\tau}\left[1 - \frac{(\phi_A + \phi_S(v))}{2\pi n}\right]$$

Output frequency is therefore a function of the term $\phi_S(v)$. To provide this phase term, a phase shift circuit is designed into the oscillator loop and is controlled by an external voltage supplied by the user. (See Figure 5)

FIGURE 5 Block Diagram of SAW VCO

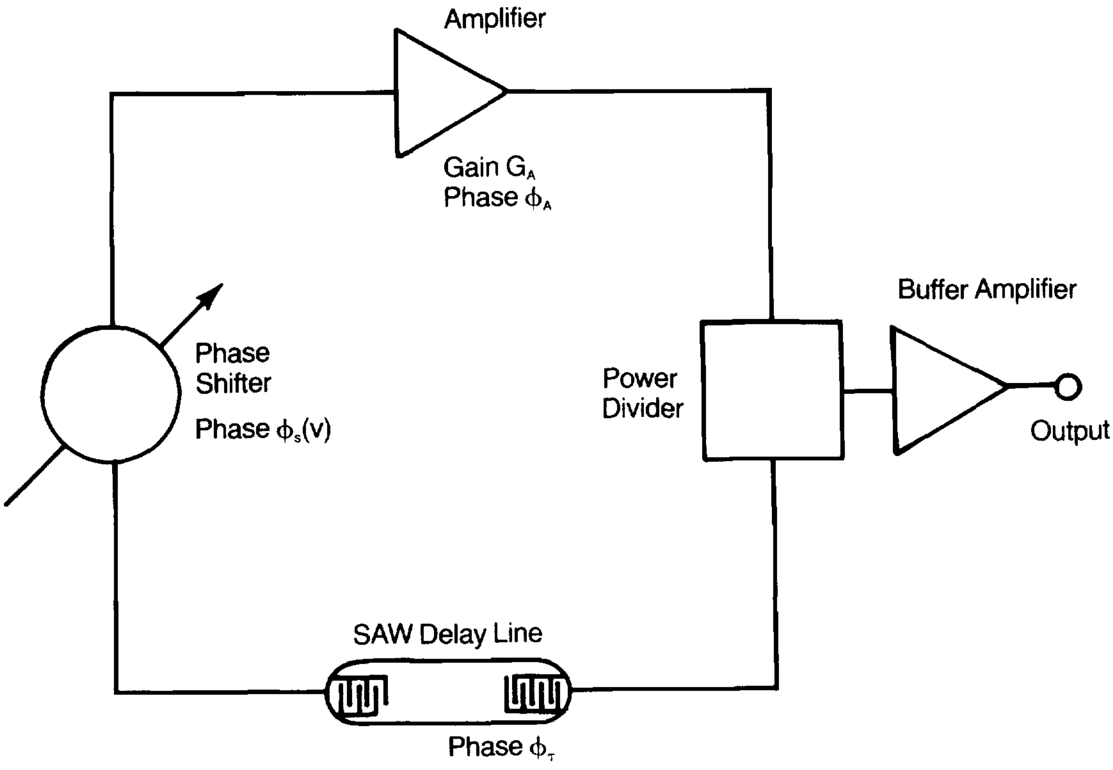

The oscillator's SAW delay line is designed to have a linear phase shift across its 4dB bandwidth providing a moderate phase slope without phase reversals in the useable passband. To maintain optimum stability and linearity, the central portion of the phase slope is used for the specified tuning range.

Figure 6 shows typical delay line amplitude and phase responses. For example, the oscillator is assumed to be initially operating at frequency (f_1). The phase shift circuit introduces a phase deviation $\Delta\phi_S$ into the oscillator loop resulting in a shift along the linear phase slope of the delay line. The frequency of oscillation shifts to satisfy the loop equations, resulting in a new loop operating frequency (f_2). Phase shift circuits are chosen to provide an operating frequency range within the linear region of the passband away from the band edges.

The linear phase characteristic of the SAW delay line is therefore used to provide a very predictable, linear, and stable tuning range for the voltage controlled oscillator.

FIGURE 6 Relationship of Phase Shift to SAW Oscillator Operating Frequency

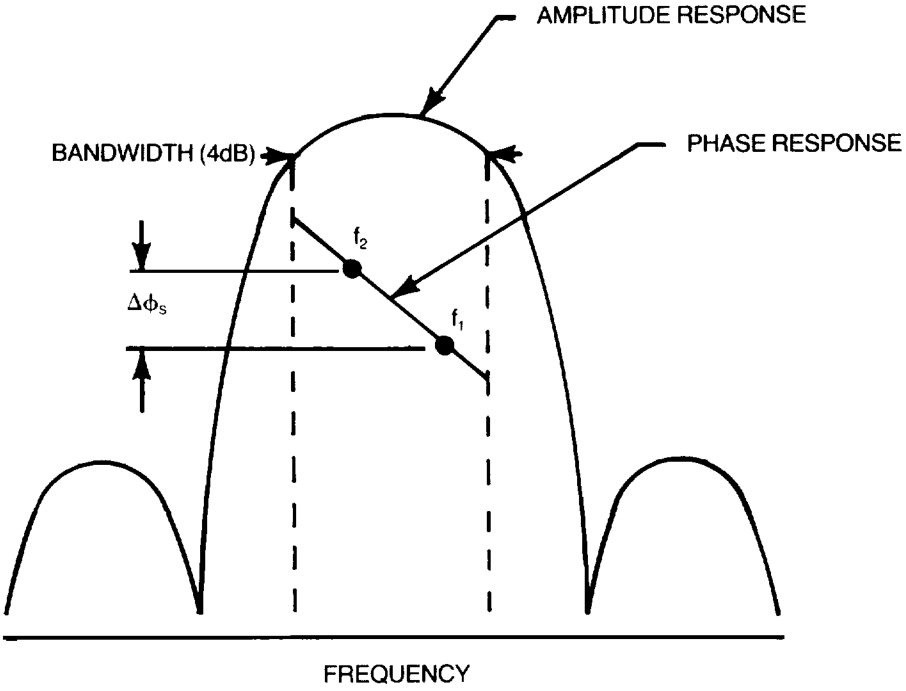

Performance Parameters

Oscillator specifications will depend on each individual application, and may vary widely. Table I lists typical performance ranges for the general product line.

This table should be used as a general guide only. For performance requirements beyond those shown in Table I please consult the factory for technical assistance.

Output Frequency

Output frequency is the operating frequency of the oscillator and is determined by the individual application. Oscillators can be fixed frequency, multimode, or externally modulated (voltage-controlled oscillators).

Output frequencies can be made available over the range from 100 MHz to >1300MHz, as a specific sinusoidal fixed-frequency output or the center of a specified tuning range. The standard oscillator circuit has been optimized for frequencies above 100MHz. The upper end of the frequency range is limited by the resolution of the photolithographic processes necessary for producing the interdigital transducers on the SAW delay line.

Frequency Stability

Frequency stability is a measure of the inherent ability of the device to remain at its specified operating frequency over time and environmental conditions. Short term sta-

TABLE I STANDARD PRODUCT

PARAMETERS	RANGE	
Operating Frequency	100 MHz to 1300 MHz	1300 MHz to 2600 MHz
Tuning Range	up to 1000 KHz	up to 1500 KHz
Modulation Bandwidth	to 500 KHz	to 500 KHz
Tuning Voltage	0 to 12V	0 to 12V
Output Power	+ 10dBm Nominal	+ 10dBm Nominal
Power Variations over Temp	± 1.5dB Maximum	± 2.0dB Maximum
Spurious Output:		
Harmonic	− 30dBc, Maximum	− 30dBc, Maximum
Non-Harmonic	− 60dBc, Maximum	− 60dBc, Maximum
Phase Noise	− 93dBc/Hz to 119dBc/Hz Nominal @ 1 KHz	− 93dBc/Hz to 119dBc/Hz Nominal @ 1 KHz
Frequency Accuracy @ 25°C	± 20 ppm	± 20 ppm
Frequency Deviation with Temperature (Note 1)	.04ppm $(\Delta°C)^2$ Maximum .02 ppm $(\Delta°C)^2$ Typ.	.04 ppm $(\Delta°C)^2$ Maximum .02 ppm $(\Delta°C)^2$ Typ.
Load Pulling Maximum VSWR = 2.0:1	<5 ppm	<5 ppm
Operating Temperature	− 55° to + 100°C Maximum	− 55° to + 100°C Maximum
Power Supply	+ 15 ± 5% VDC, 125mA	+ 15 ± 5% VDC, 175mA
Power Supply Sensitivity	<2 ppm/volt	<2 ppm/volt
Power Supply Rejection (to 100 KHz @ 25mv p-p)	− 60dBc, Maximum	− 60dBc, Maximum
Size	1.5″ × 1.0″ × .2″ Case B or Case V see fig. 13	1.9″ × 1.25″ × .35″ Case Y see fig. 13
Weight	20 Grams, Maximum	70 Grams, Maximum

(1) Referenced to inflection (turnover) temperature.
$\Delta°C$ = (Turnover Temperature − Ambient Temperature)

bility (seconds), is a function of phase fluctuations (flicker) and white noise in the oscillator circuit. (See "Phase Noise.") Medium term stability (hours) is primarily a function of the temperature coefficient of the SAW device. To minimize medium term deviation the SAW is constructed on a temperature stable quartz substrate. The standard orientation of the substrate used yields a zero 1st order temperature coefficient and a 2nd order temperature coefficient that is closely approximated by $2 \times 10^{-2} (\Delta T)^2$ ppm. Frequency as a function of temperature will vary according to:

$$f(T) = f_o - .02f_o(T - T_o)^2$$

$$\Delta f$$

T = Temperature (°C)
T_o = Turnover Temperature, 25°C Nominal
f_o = Center Frequency (MHz)
Δf = Frequency Deviation (MHz)
$f(T)$ = Frequency (MHz) as a function of T.

As shown in Figure 7, the frequency deviation vs. temperature curve for the SAW is a parabola whose turnover is near 25°, and the deviation Δf due to temperature is negative. The actual deviation is approximately 12.5 ppm for the temperature range of 0 to 50°C. To allow for margin and other order effects, the overall oscillator stability is specified at −25 ppm for the temperature range 0°C to 50°C. As an example, a −25 ppm frequency deviation due to a temperature variation 0°C to 50°C for a 200 MHz oscillator calculates to be 5 KHz. For optimizing the specific temperature requirements, other quartz orientations are available which produce coefficients at other turnover temperatures (e.g. 55°C).

FIGURE 7 Typical Frequency v.s. Temperature Characteristics

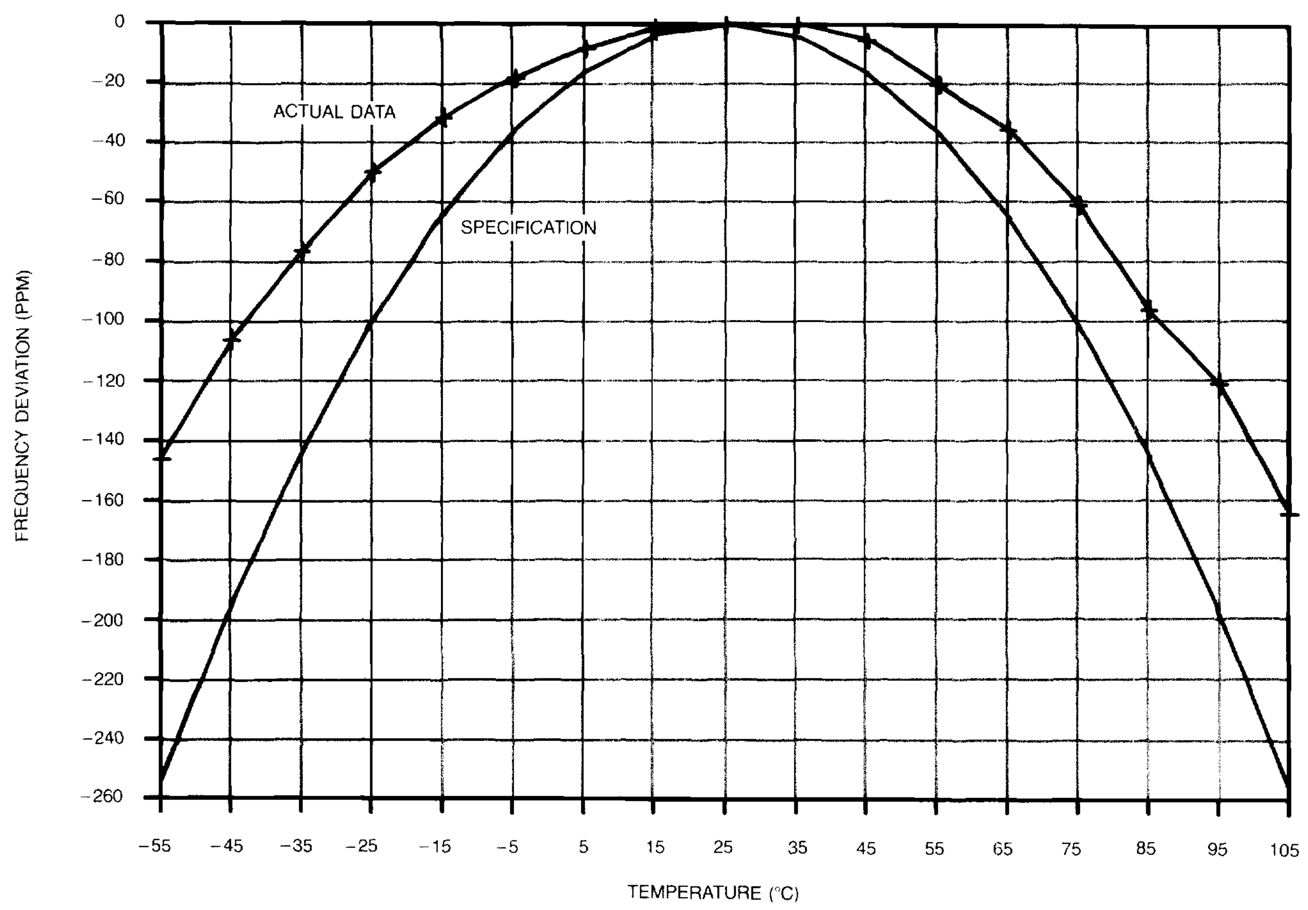

Spurious Signals

Spurious signals are unwanted outputs in the frequency spectrum (see Figure 8) and are basically categorized as follows:

- Harmonics of f_0 which are typically suppressed to −30dBc or better, and
- Non-harmonic outputs which are typically suppressed to −60dBc or better.

Phase Noise

Phase noise, commonly referred to as single sideband (SSB) noise, is the predominant factor of short term stability. It is due to random phase modulation of the carrier frequency produced by white noise and 1/f noise sources in the oscillator. It appears as carrier sidebands whose amplitudes vary as a function of frequency offset from the carrier frequency. Phase noise is commonly expressed as the ratio of sideband noise power per 1 Hz bandwidth to the carrier power, given in dBc (dB below carrier), and specified at some frequency offset from the carrier.

FIGURE 8 Harmonic and Non-harmonic Spurious Responses

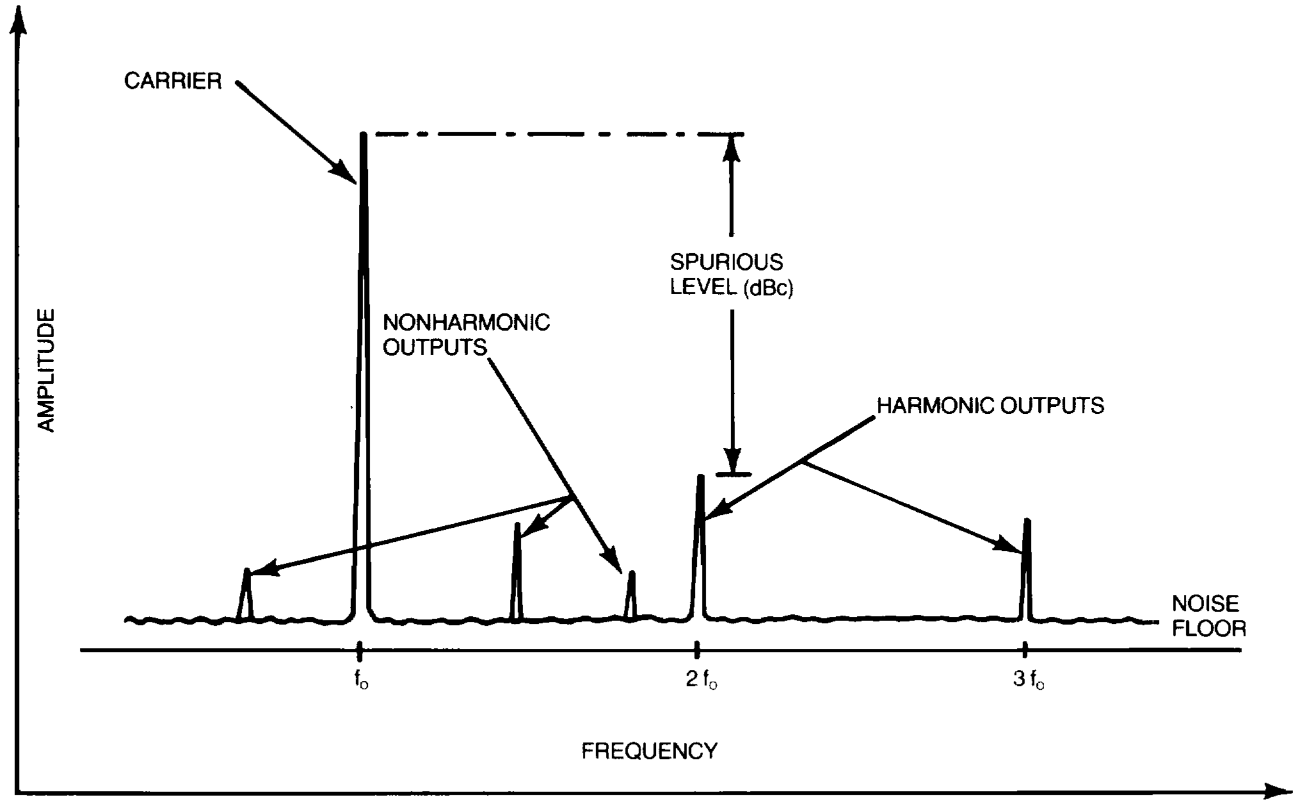

Standard noise theory supported by existing oscillator data allows phase noise to be accurately predicted. Figure 9 shows typical slopes for phase noise characteristics for various SAW delays. Beyond 1 MHz, white noise primarily determines the noise floor. Closer to the carrier, noise increases as a function of frequency. Due to the various types of flicker noise the frequency response has first, second and third order effects. The predominant frequency effects in an oscillator are the second and third noise orders causing noise to increase at $\frac{20\text{dB}}{\text{decade}}$ and $\frac{30\text{dB}}{\text{decade}}$ rates as shown. In an Andersen oscillator, the 1/f corner frequency is generally 2 KHz.

The frequency (f_n) at which the noise begins to increase above the noise floor is a function of the noise bandwidth

given by $f_n \cong \frac{\text{Bandwidth}}{2} \cong \frac{1}{2\tau}$

where τ = SAW delay time

As the delay time is made longer, f_n is moved closer to f_c and noise improvement can be realized. However, the bandwidth is then narrower, reducing the effective tuning range of the oscillator. (See Phase Noise vs. Tuning Range.)

FIGURE 9 Nominal SSB Phase Noise for Various Delays

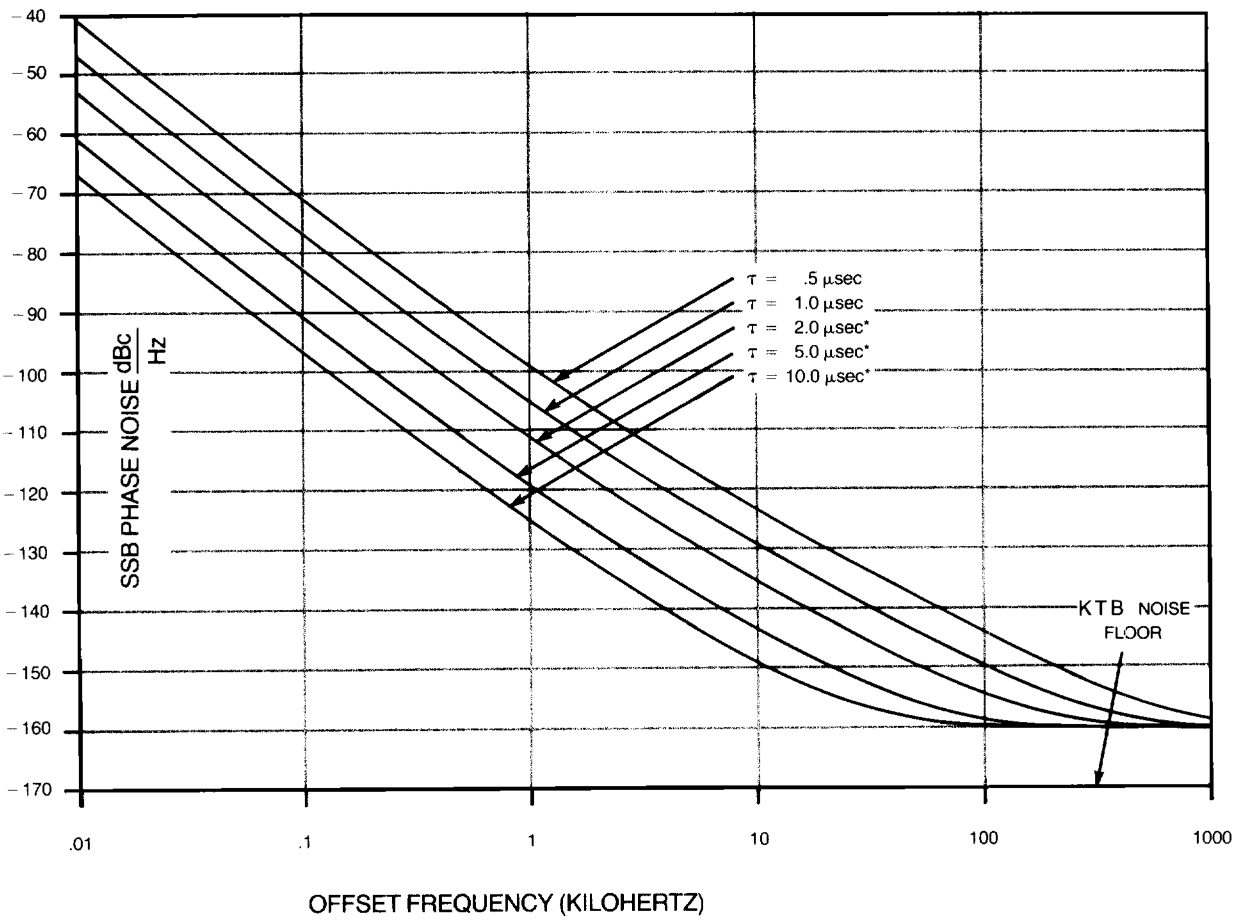

*REQUIRE ALTERNATE PACKAGING

Tuning Range

Tuning Range is the frequency range over which the oscillator can be varied or "pulled." The available tuning range is governed by the bandwidth of the SAW delay line which is by design $= \frac{1}{\text{SAW delay}} = \frac{1}{\tau}$. In order to ensure a linear and stable tuning region the central 50% of the bandwidth is used or $\frac{1}{2\tau}$. Shorter delay times therefore, allow wider tuning ranges. A practical lower limit on the SAW delay is 500 nsec, yielding a maximum tuning range of 1 MHz. Oscillators can generally be designed for up to 1 MHz tuning ranges independent of center frequency but dependent on phase noise. (See Tuning Range v.s. Phase Noise.)

For example, Figure 10 shows the normalized tuning curve of a SAW VCO that utilizes an 800 nsec delay line with an available passband of 1.2 MHz. Output frequency in Kilohertz is plotted as a function of increments of a DC input control voltage. Tuning linearity is shown for a 450 KHz frequency range. The average tuning sensitivity $\frac{(\Delta f)}{(\Delta v)}$ for this SAW VCO is 38 KHz per volt.

FIGURE 10 Frequency vs. Tuning Voltage for SAW VCO with 800 nsec Delay Line

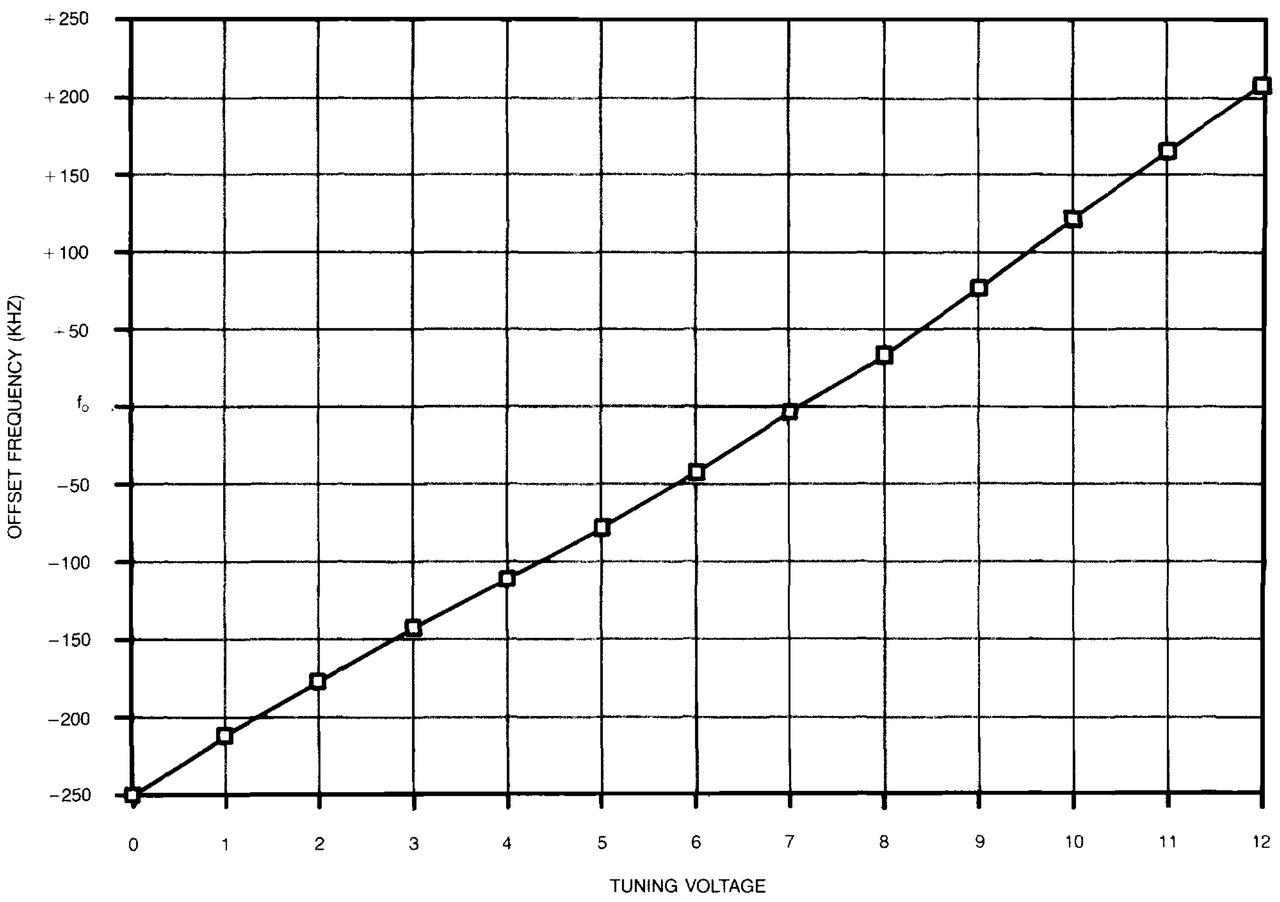

The maximum practical bandwidth may be exceeded under certain conditions when other performance specifications allow it. For instance, an oscillator can be tuned over more than 50% of its available delay line passband; however, tuning linearity and temperature stability will degrade. More importantly, phase reversals occur at the passband extremes which result in frequency hopping.

To achieve wider tuning ranges the delay line can be designed, under certain conditions, with a wider passband (shorter delay). This design would utilize a more sophisticated SAW device and would result in a corresponding increase in phase noise.

Output Power

Output power is a measure of the signal power (in dBm) of the carrier frequency output in a 50 ohm load. The standard oscillator output power is nominally specified at +10dBm. Figure 11 shows the power output versus temperature data for an Andersen oscillator operating in the UHF range.

FIGURE 11 Typical Output Power vs. Temperature for SAW VCO

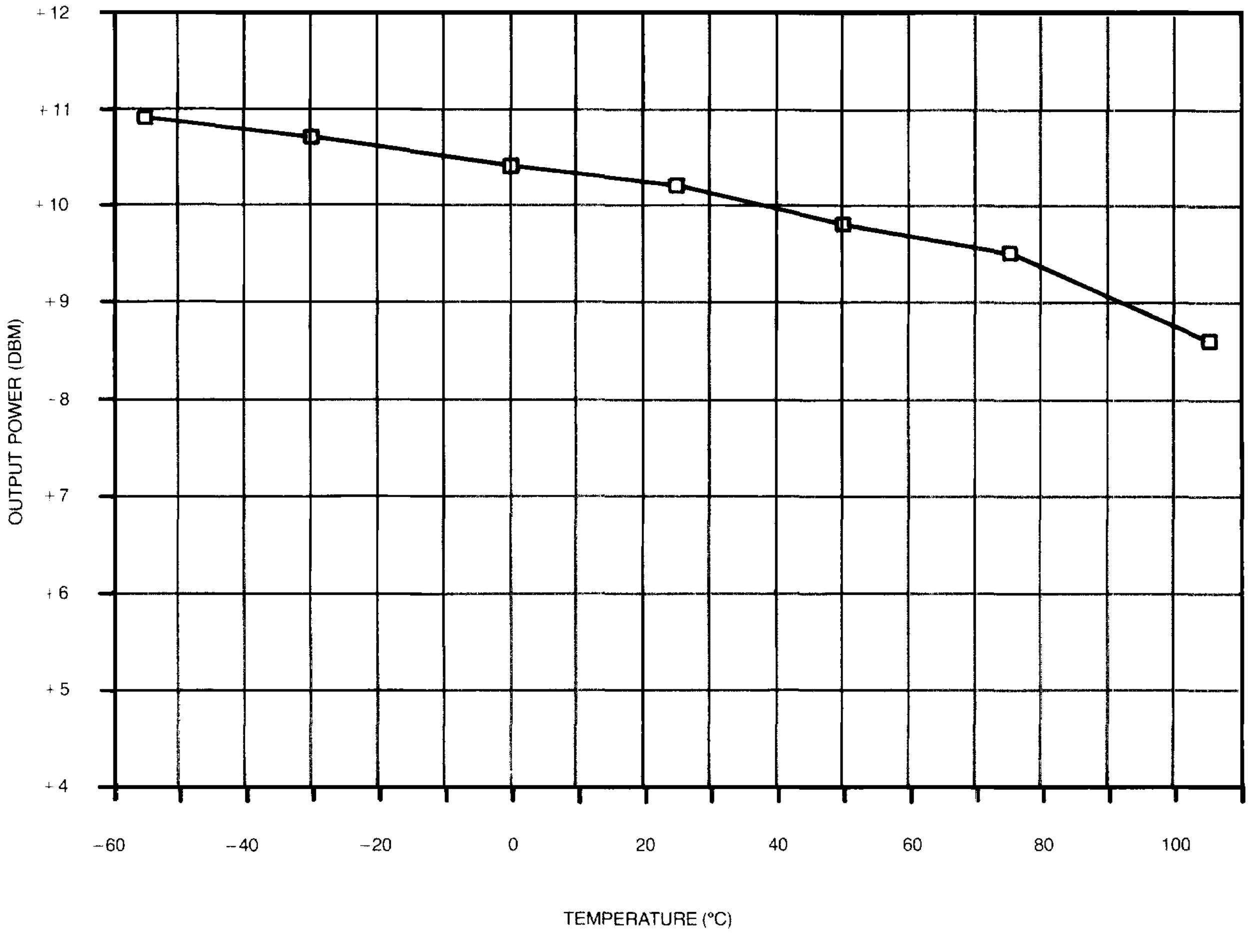

Phase Noise vs. Tuning Range

For practical reasons discussed earlier, the available tuning range is considered to be 50% of the delay line bandwidth or $\frac{1}{2\tau}$. Figure 12 shows the predicted phase noise characteristics as a function of tuning range. At an offset frequency of 10 KHz, an oscillator design with a .5 μsec delay line will have a phase noise response of approximately −110 dBc/Hz and a linear tuning range of 1000 KHz. If the application only required a 250 KHz tuning range, a phase noise improvement of more than 10 dBc/Hz could be realized.

It is obvious that the use of wider bandwidths to achieve large tuning ranges results in increased phase noise. On the other hand, where noise characteristics are not a major concern, wide tuning ranges can be made available. Each requirement should be analyzed carefully to achieve the best performance compromise. Figures 9 and 12 are useful design guides for this determination.

Frequency Modulation

Because the delay line oscillator offers relatively wide tuning bandwidth, the SAW VCO is very suitable for frequency modulated (FM) applications. This FM feature however, is a function of the modulation index and bandwidth necessary for each application.

For a sinusoidal FM modulated carrier, the modulation index is defined as $M = \frac{\Delta f}{f_m}$:

where Δf = deviation frequency of VCO
f_m = modulation frequency

FIGURE 12 Nominal Phase Noise vs. Tuning Range at 1 KHz Offset Frequency

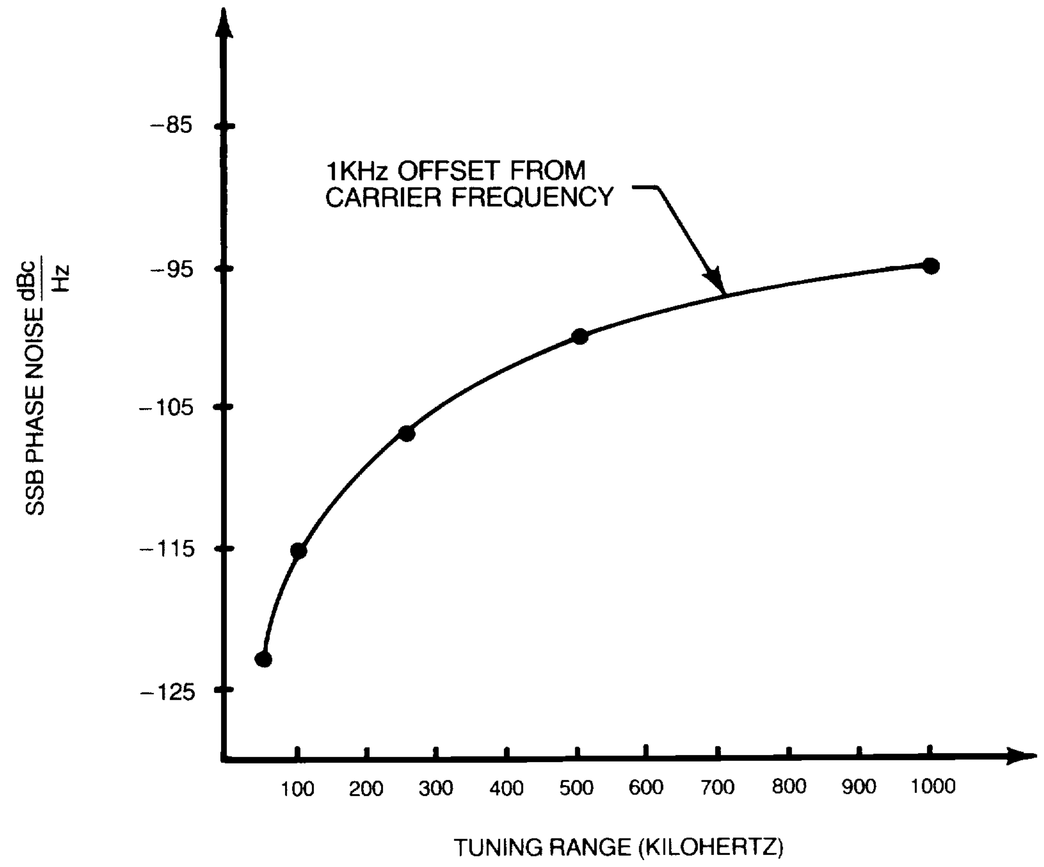

For $M \geq 1$, approximately 99% of the signal power is retained in the bandlimited signal and the required VCO bandwidth is given by $BW = 2f_m (M + 1) = 2 (\Delta f + f_m)$. For only 95% of the signal power to be retained in the bandlimited signal the bandwidth is approximated by $BW = 2f_m (M) = 2\Delta f$.

For example, a requirement for a deviation frequency (Δf) of 200 KHz modulated at a 100 KHz rate (f_m), the necessary VCO bandwidth is 600 KHz to retain 99% of the signal power. If a 4% decrease in signal power can be tolerated, the necessary VCO bandwidth becomes 400 KHz. Modulation frequency, deviation, and signal power, therefore, should be considered when specifying an FM VCO requirement.

For $M \geq 5$ (when the modulation frequency is much less than the required frequency deviation) the required VCO bandwidth can be approximated by $BW = 2\Delta f$, with less than .1% reduction in signal power.

For other than sinusoidal modulation, the required modulation bandwidth is determined by the frequency spectrum of the base band modulation. Generally, the above bandwidth relationships hold true and the specified modulation bandwidth and deviation must be consistent with the available VCO bandwidth.

Packaging

Standard package outlines for Andersen oscillator products are shown in Figure 13 below and on next page. Various configurations and sizes can be designed depending on individual requirements.

FIGURE 13 Standard SAW Oscillator Outline Drawing

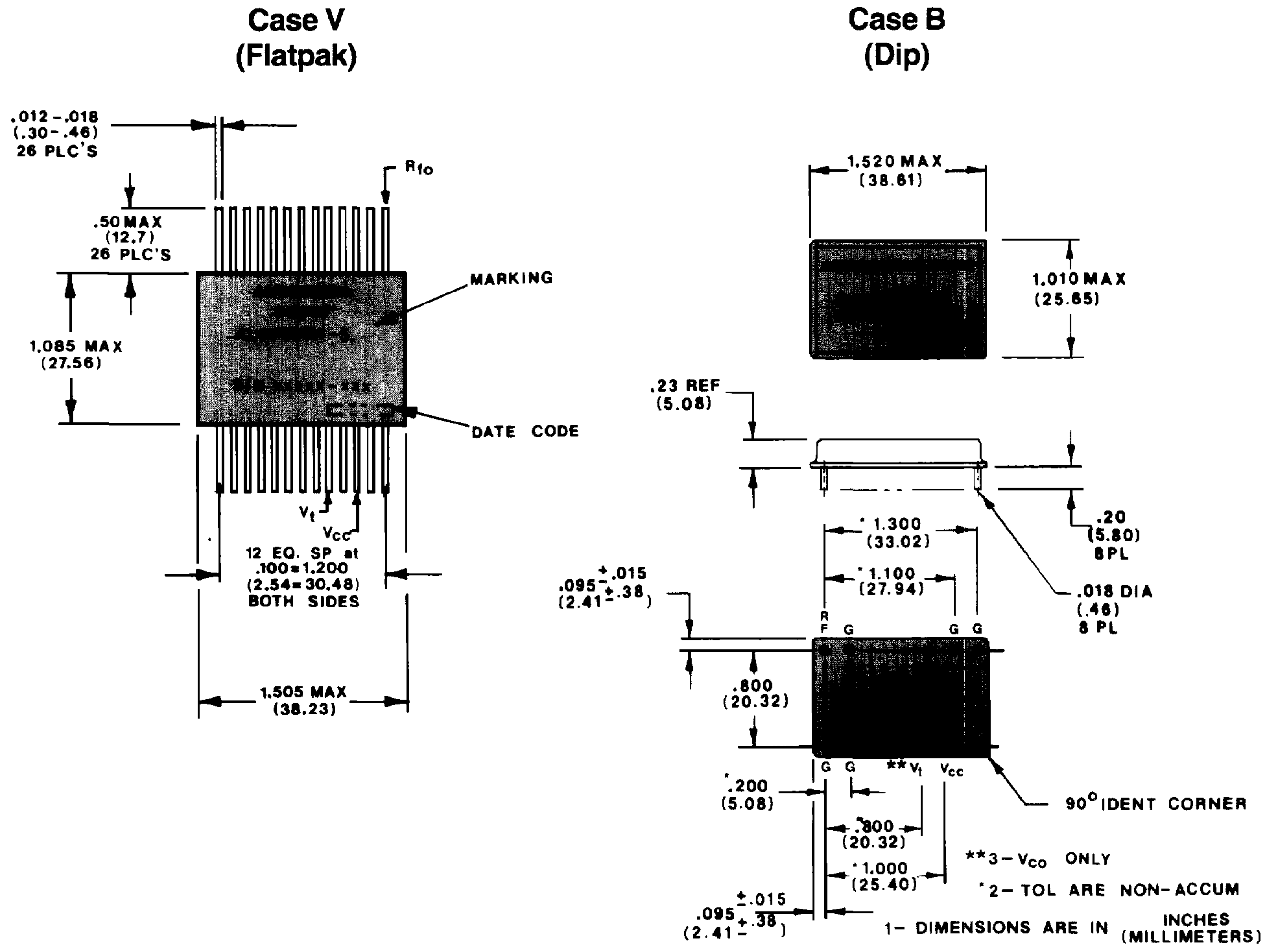

Case V (Flatpak)

Case B (Dip)

FIGURE 13 Standard SAW Oscillator Outline Drawings (continued)

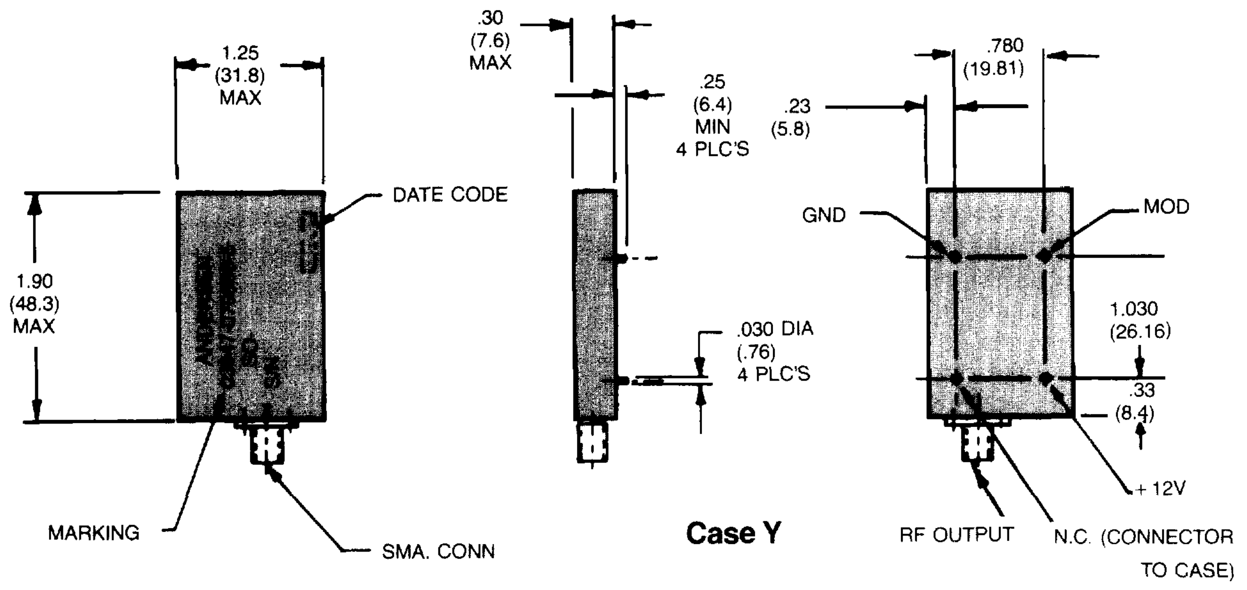

High Reliability Screening — Available Upon Request

Parameter Test	MIL-Standard	Method
Temperature Cycling	883	Method 1010, Condition B 10 cycles, −55 to 125°C (non-operating)
Constant Acceleration	883	Method 2001, Condition A (5000g) Y1 only
Random Vibration	202	Method 214A Condition I, Letter E (non-operating)
Burn-In	883	Method 1015 except 96 hrs. @ +85°C case temperature with +15VDC power applied
Seal	fine 883 gross 883	Method 1014, Condition A Method 1014, Condition C

How To Specify

To specify order by Model Number, as follows:

SO – XXX.XX – XXX – X.X

XXX.XX: Center Freq. (in MH$_z$)

XXX: Tuning Range (in KHz). Enter 0 for fixed frequency requirements.

X.X: Optional – Delay of the SAW (μsec)

Listing of Standard SAW Hybrid Oscillators

Model No.	Center Freq. (MHz)	Tuning BW (KHz) Nom. (See note 1)	SAW Delay (USec)	Nominal Inflection Temperature (°C)	Case Style (See note 2)
SO-80.7-400-0.6	80.7	400	0.6	25	B
SO-100.00-1000-0.55	100.00	1000	0.55	25	B
SO-104.00-400-1.33	104.00	400	1.33	0	B
SO-104.50-400-1.33	104.50	400	1.33	0	B
SO-125.00-200-1.3	125.00	200	1.3	25	B
SO-137.10-200-1.0	137.10	200	1.0	25	B
SO-140.00-100-1.0	140.00	100	1.0	25	B
SO-143.00-400-1.3	143.00	400	1.3	0	B
SO-154.80-600-0.8	154.80	600	0.8	25	B
SO-162.50-400-0.6	162.5	400	0.6	25	B
SO-180.00-700-0.66	180.00	700	0.66	25	B
SO-187.75-600-0.66	187.75	600	0.66	25	B
SO-200.00-1000-0.55	200.00	1000	0.55	25	B
SO-239.616-400-1.0	239.616	400	1.0	25	B
SO-240-450-0.8	240.00	450	0.8	25	B
SO-254.70-100-1.0	254.70	100	1.0	25	B
SO-270-500-1.0	270.00	500	1.0	25	B
SO-278.52-400-0.6	278.52	400	0.6	25	B
SO-300.00-300-1.3	300.00	300	1.3	0	B
SO-303.87-400-1.33	303.87	400	1.33	0	B
SO-310-1000-0.6	310.00	1000	0.6	25	B
SO-311-600-0.66	311.00	600	0.66	25	B
SO-314.00-500-0.8	314.00	500	0.8	0	B
SO-320-100-1.5	320.00	100	1.5	25	B
SO-350.00-700-0.6	350.00	700	0.6	25	B
SO-353.18-40-2.0	353.18	40	2.0	25	Custom
SO-357.18-0-1.0	357.18	400	1.0	0	B
SO-360-1000-0.6	360.00	1000	0.6	25	B
SO-377.00-700-0.6	377.00	700	0.6	25	B
SO-377.59-1000-0.6	377.59	1000	0.6	25	B
SO-392.81-200-1.0	392.81	200	1.0	25	B
SO-397.2-200-1.0	397.2	200	1.0	25	B
SO-400.00-400-1.5	400.00	400	1.5	25	B
SO-410.00-200-1.0	410.00	200	1.0	25	B
SO-425.5-200-0.6	425.5	200	0.6	25	B
SO-445-400-0.6	445.00	400	0.6	25	B
SO-445.8-200-1.0	445.8	200	1.0	25	B
SO-450-400-0.6	450.00	400	0.6	25	B

Listing of Standard SAW Hybrid Oscillators (Cont.)

Model No.	Center Freq. (MHz)	Tuning BW (KHz) Nom. (See note 1)	SAW Delay (USec)	Nominal Inflection Temperature (°C)	Case Style (See note 2)
SO-476.00-200-1.0	476.00	200	1.0	25	B
SO-495-400-0.6	495.00	400	0.6	25	B
SO-497.3-400-0.6	497.3	400	0.6	25	B
SO-500.00-400-1.0	500.00	400	1.0	25	B
SO-503.6-300-0.6	503.6	300	0.6	25	B
SO-512.00-300-1.33	512.00	300	1.33	0	B
SO-512.00-500-0.83	512.00	500	0.83	25	B
SO-515.00-400-0.06	515.00	400	0.6	0	B
SO-540.00-400-1.0	540.00	400	1.0	25	B
SO-545.00-400-0.6	545.00	400	0.6	0	B
SO-548.35-520-0.6	548.35	520	0.6	25	B
SO-550.00-400-1.0	550.00	400	1.0	25	B
SO-564.99-400-1.0	564.99	400	1.0	25	B
SO-570.48-200-1.0	570.48	200	1.0	25	B
SO-595.20-500-1.0	595.20	500	1.0	25	B
SO-595.40-300-1.0	595.40	300	1.0	25	B
SO-599.44-400-1.0	599.44	400	1.0	25	B
SO-600.00-1000-0.5	600.00	1000	0.5	25	B
SO-600.30-300-1.0	600.30	300	1.0	25	B
SO-604.00-400-1.0	604.00	400	1.0	25	B
SO-607.5-400-0.6	607.5	400	0.6	25	B
SO-615-400-0.6	615.0	400	0.6	25	B
SO-622.08-300-0.6	622.08	300	0.6	25	B
SO-622.5-400-0.6	622.5	400	0.6	25	B
SO-630-400-0.6	630.0	400	0.6	25	B
SO-637.5-400-0.6	637.5	400	0.6	25	B
SO-638.40-250-1.0	638.40	250	1.0	25	B
SO-645-400-0.6	645.00	400	0.6	25	B
SO-652.5-400-0.6	652.5	400	0.6	25	B
SO-661.4-400-0.6	661.4	400	0.6	25	B
SO-662.08-400-0.6	662.08	400	0.6	25	B
SO-670.00-400-1.0	670.00	400	1.0	0	B
SO-676.80-250-1.0	676.80	250	1.0	25	B
SO-680.00-400-1.0	680.00	400	1.0	25	B
SO-690.0-200-1.0	690.00	200	1.0	25	B
SO-695-400-0.6	695.00	400	0.6	25	B
SO-700.00-600-0.66	700.00	600	0.66	25	V

(See Notes on next page)

Listing of Standard SAW Hybrid Oscillators (Cont.)

Model No.	Center Freq. (MHz)	Tuning BW (KHz) Nom. (See note 1)	SAW Delay (USec)	Nominal Inflection Temperature (°C)	Case Style (See note 2)
SO-705.67-700-0.5	705.67	700	0.5	25	V
SO-707.17-700-0.5	707.17	700	0.5	25	V
SO-716.80-500-1.0	716.80	500	1.0	25	V
SO-717.00-500-1.0	717.00	500	1.0	25	V
SO-717.30-500-1.0	717.30	500	1.0	25	V
SO-724.80-250-1.0	724.80	250	1.0	25	V
SO-725.00-400-1.0	725.00	400	1.0	25	V
SO-728.00-300-1.0	728.00	300	1.0	25	V
SO-745-400-0.6	745.00	400	0.6	25	V
SO-763.84-300-1.0	763.84	300	1.0	25	V
SO-775.0-300-1.0	775.00	300	1.0	25	V
SO-777-300-1.0	777.00	300	1.0	25	V
SO-787.00-300-1.0	787.00	300	1.0	25	V
SO-833.7-400-0.6	833.7	400	0.6	25	V
SO-850.0-400-1.0	850.0	400	1.0	25	V
SO-850.1-400-0.6	850.1	400	0.6	25	V
SO-860-300-1.2	860.00	300	1.2	25	V
SO-862.5-350-1.0	862.5	350	1.0	25	V
SO-878.5-400-0.66	878.5	400	0.66	25	V
SO-889-400-0.6	889.00	400	0.6	25	V
SO-917.25-200-1.0	917.25	200	1.0	25	V
SO-918-400-0.6	918.00	400	0.6	25	V
SO-930.0-300-1.00	930.0	300	1.00	25	V
SO-950.244-350	950.244	350	1.0	25	V
SO-966-300-1.0	966.00	300	1.0	25	V
SO-989.5-500-0.6	989.5	500	0.6	25	V
SO-1000.00-400-1.0	1000.00	400	1.0	25	V
SO-1024.00-300-1.0	1024.00	300	1.0	25	V
SO-1030.00-400-1.0	1030.00	400	1.0	25	V
SO-1090.00-400-1.0	1090.00	400	1.0	25	V
SO-1114.11-400-0.6	1114.11	400	0.6	25	V
SO-1250.0-400-0.6	1250.0	400	0.6	25	B
SO-1280-400-0.6	1280.0	400	0.6	25	Y
SO-1667.52-1000-0.66	1667.52	1000	0.66	25	Y
SO-1700-1500-1.0	1700.0	1500	1.0	25	Y
SO-2400-1500-1.0	2400.0	1500	1.0	25	Y
SO-2488-1000-0.6	2488.0	1000	0.6	25	Y

NOTES

1. Tuning BW (KHz) Nom.–All models available as either fixed frequency or VCO.
2. Oscillators specified in Case V (flatpak) are available in Case B and Case B units are also available in Case V.
3. Case Y is also available without connector. It is designated as Case Z.
4. Case V (flatpak) is also available with mounting flanges.

ANDERSEN LABORATORIES

Andersen Laboratories, Inc., 45 Old Iron Ore Road, Bloomfield, CT 06002 Telephone (203) 286-9090/FAX 203-242-4472