620-003
Backshell Accessory - Straight Strain Relief
Rotatable Coupling

CONNECTOR DESIGNATOR
A-F-L-H-S
ROTATABLE COUPLING

620 A S 003 M 16

- Product Series
- Connector Designator
- Angle and Profile
  S = Straight
- Basic Part No.
- Finish (Table II)
- Shell Size

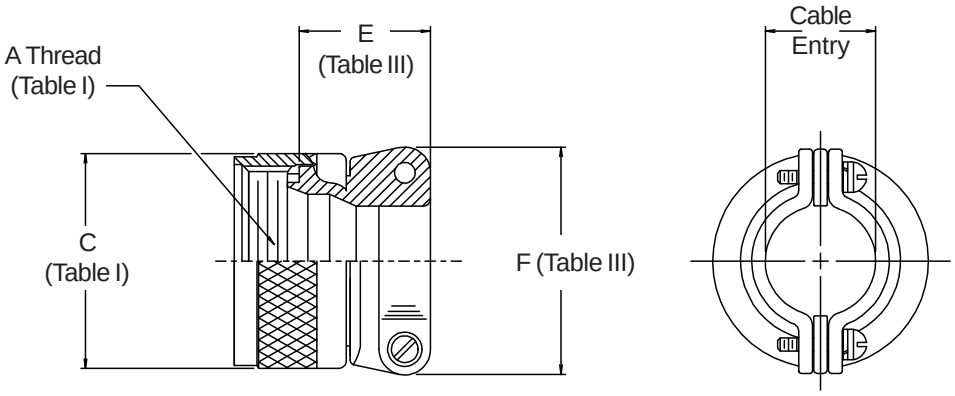

TABLE III: CABLE ENTRY

Shell Size Conn. Desig. A,F,L	H	E Max		F Nom		H Cable Entry Closed		Open	
08	09	.625	(15.9)	.750	(19.1)	.055	(1.4)	.125	(3.2)
10	11	.656	(16.7)	.750	(19.1)	.055	(1.4)	.188	(4.8)
12	13	.718	(18.2)	.937	(23.8)	.095	(2.4)	.250	(6.4)
14	15	.968	(24.6)	1.015	(25.8)	.219	(5.6)	.375	(9.5)
16	17	1.105	(28.1)	1.125	(28.6)	.219	(5.6)	.500	(12.7)
18	19	1.105	(28.1)	1.188	(30.2)	.345	(8.8)	.625	(15.9)
20	21	1.105	(28.1)	1.312	(33.3)	.469	(11.9)	.750	(19.1)
22	23	1.105	(28.1)	1.437	(36.5)	.594	(15.1)	.875	(22.2)
24	25	1.105	(28.1)	1.562	(39.7)	.594	(15.1)	1.000	(25.4)
28		1.105	(28.1)	1.812	(46.0)	.859	(21.8)	1.250	(31.8)

1. Cable Entry is defined as the accommodation entry for the wire bundle or cable. Dimensions are not intended for inspection criteria.
2. Metric dimensions (mm) are indicated in parentheses.

© 20053 Glenair, Inc. CAGE Code 06324 Printed in U.S.A.