REVISIONS			
LTR	DESCRIPTION	DATE (YR-MO-DA)	APPROVED

REV																			
SHEET																			
REV																			
SHEET	15	16	17	18	19	20	21	22											

REV STATUS OF SHEETS	REV														
	SHEET	1	2	3	4	5	6	7	8	9	10	11	12	13	14

PMIC N/A

STANDARDIZED MILITARY DRAWING

THIS DRAWING IS AVAILABLE FOR USE BY ALL DEPARTMENTS AND AGENCIES OF THE DEPARTMENT OF DEFENSE

AMSC N/A

PREPARED BY
Thanh V. Nguyen

CHECKED BY
Thanh V. Nguyen

APPROVED BY
Monica L. Poelking

DRAWING APPROVAL DATE
94-01-14

REVISION LEVEL

DEFENSE ELECTRONICS SUPPLY CENTER
DAYTON, OHIO 45444

MICROCIRCUIT, DIGITAL, BIPOLAR CMOS, SCAN TEST DEVICE WITH OCTAL D-TYPE EDGE-TRIGGERED FLIP-FLOP, THREE-STATE OUTPUTS, MONOLITHIC SILICON

SIZE	CAGE CODE	5962-91727
A	67268	

SHEET 1 OF 22

DESC FORM 193
JUL 91

5962-E053-94

DISTRIBUTION STATEMENT A. Approved for public release; distribution is unlimited.

Powered by ICminer.com Electronic-Library Service CopyRight 2003

1. SCOPE

1.1 Scope. This drawing forms a part of a one part - one part number documentation system (see 6.6 herein). Two product assurance classes consisting of military high reliability (device classes Q and M) and space application (device class V), and a choice of case outlines and lead finishes are available and are reflected in the Part or Identifying Number (PIN). Device class M microcircuits represent non-JAN class B microcircuits in accordance with 1.2.1 of MIL-STD-883, "Provisions for the use of MIL-STD-883 in conjunction with compliant non-JAN devices". When available, a choice of Radiation Hardness Assurance (RHA) levels are reflected in the PIN.

1.2 PIN. The PIN shall be as shown in the following example:

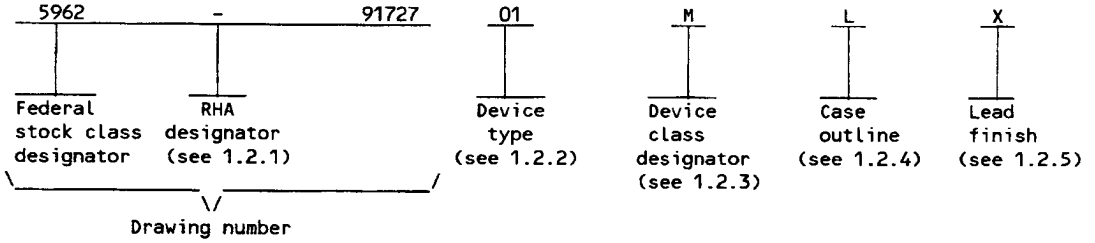

1.2.1 RHA designator. Device class M RHA marked devices shall meet the MIL-I-38535 appendix A specified RHA levels and shall be marked with the appropriate RHA designator. Device classes Q and V RHA marked devices shall meet the MIL-I-38535 specified RHA levels and shall be marked with the appropriate RHA designator. A dash (-) indicates a non-RHA device.

1.2.2 Device type(s). The device type(s) shall identify the circuit function as follows:

Device type	Generic number	Circuit function
01	54BCT8374A	Scan test device with octal D-type edge-triggered flip-flop, three-state outputs

1.2.3 Device class designator. The device class designator shall be a single letter identifying the product assurance level as follows:

Device class	Device requirements documentation
M	Vendor self-certification to the requirements for non-JAN class B microcircuits in accordance with 1.2.1 of MIL-STD-883
Q or V	Certification and qualification to MIL-I-38535

1.2.4 Case outline(s). The case outline(s) shall be as designated in MIL-STD-1835, and as follows:

Outline letter	Descriptive designator	Terminals	Package style
L	GDIP3-T24 or CDIP4-T24	24	Dual-in-line
3	CQCC1-N28	28	Leadless chip carrier

1.2.5 Lead finish. The lead finish shall be as specified in MIL-STD-883 (see 3.1 herein) for class M or MIL-I-38535 for classes Q and V. Finish letter "X" shall not be marked on the microcircuit or its packaging. The "X" designation is for use in specifications when lead finishes A, B, and C are considered acceptable and interchangeable without preference.

Powered by ICminer.com Electronic-Library Service CopyRight 2003

1.3 Absolute maximum ratings. 1/ 2/ 3/

Supply voltage range (V_{CC})	-0.5 V dc to +7.0 V dc
DC input voltage range (except TMS) (V_{IN})	-0.5 V dc to +7.0 V dc 4/
DC input voltage range (TMS) (V_{IN})	-0.5 V dc to +12.0 V dc 4/
DC output voltage range applied to any output in the disabled or power-off state (V_{OUT})	-0.5 V dc to +5.5 V dc
DC output voltage range applied to any output in the high state (V_{OUT})	-0.5 V dc to V_{CC}
DC input clamp current (I_{IK})	-30 mA
DC output current into any output in the low state (I_{OL}) (per output):	
TDO	+40 mA
Any Q	+96 mA
Storage temperature range (T_{STG})	-65°C to +150°C
Lead temperature (soldering, 10 seconds)	+300°C
Thermal resistance, junction-to-case (Θ_{JC})	See MIL-STD-1835
Junction temperature (T_J)	+175°C
Maximum power dissipation (P_D)	497 mW 5/

1.4 Recommended operating conditions. 2/ 3/

Supply voltage range (V_{CC})	+4.5 V dc to +5.5 V dc
Maximum low level input voltage (V_{IL})	0.8 V
Minimum high level input voltage (V_{IH})	2.0 V
Double high level input voltage, TMS (V_{IHH})	+10.0 V dc minimum to +12.0 V maximum
Maximum input clamp current (I_{IK})	-18 mA
Maximum high level output current (I_{OH}):	
TDO	-3 mA
Any Q	-12 mA
Maximum low level output current (I_{OL}):	
TDO	20 mA
Any Q	48 mA
Minimum setup time (t_s):	
Data before CLK↑	3.0 ns
Any D before TCK↑	6.0 ns
CLK or OE before TCK↑	6.0 ns
TDI before TCK↑	6.0 ns
TMS before TCK↑	12.0 ns
Minimum hold time (t_h):	
Data after CLK↑	2.0 ns
Any D after TCK↑	4.5 ns
CLK or OE after TCK↑	4.5 ns
TDI after TCK↑	4.5 ns
TMS after TCK↑	0.0 ns
Minimum pulse width (t_w):	
CLK high or low	5.0 ns
TCK high or low	25.0 ns
TMS double high	50.0 ns 6/
Minimum delay time, power-up to TCK↑ (t_d)	100.0 ns 6/
Maximum clock frequency (f_{MAX}):	
CLK	70 MHz
TCK	20 MHz
Case operating temperature range (T_C)	-55°C to +125°C

1/ Stresses above the absolute maximum rating may cause permanent damage to the device. Extended operation at the maximum levels may degrade performance and affect reliability.
2/ Unless otherwise noted, all voltages are referenced to GND.
3/ The limits for the parameters specified herein shall apply over the full specified V_{CC} range and case temperature range of -55°C to +125°C.
4/ The input negative voltage rating may be exceeded provided that the input clamp current rating is observed.
5/ Power dissipation values are derived using the formula $P_D = V_{CC}I_{CC} + nV_{OL}I_{OL}$, where V_{CC} and I_{OL} are as specified in 1.4 above, I_{CC} and V_{OL} are as specified in table I herein, and n represents the total number of outputs.
6/ This parameter is not production tested.

Powered by ICminer.com Electronic-Library Service CopyRight 2003

1.5 Digital logic testing for device classes Q and V.

Fault coverage measurement of manufacturing
logic tests (MIL-STD-883, test method 5012) - - - - - - - - - - - - - XX percent 1/

2. APPLICABLE DOCUMENTS

2.1 Government specification, standards, bulletin, and handbook. Unless otherwise specified, the following specification, standards, bulletin, and handbook of the issue listed in that issue of the Department of Defense Index of Specifications and Standards specified in the solicitation, form a part of this drawing to the extent specified herein.

SPECIFICATION

MILITARY

MIL-I-38535 - Integrated Circuits, Manufacturing, General Specification for.

STANDARDS

MILITARY

MIL-STD-883 - Test Methods and Procedures for Microelectronics.
MIL-STD-973 - Configuration Management.
MIL-STD-1835 - Microcircuit Case Outlines

BULLETIN

MILITARY

MIL-BUL-103 - List of Standardized Military Drawings (SMD's).

HANDBOOK

MILITARY

MIL-HDBK-780 - Standardized Military Drawings.

(Copies of the specification, standards, bulletin, and handbook required by manufacturers in connection with specific acquisition functions should be obtained from the contracting activity or as directed by the contracting activity.)

2.2 Non-Government publications. The following document(s) form a part of this document to the extent specified herein. Unless otherwise specified, the issues of the documents which are DOD adopted are those listed in the issue of the DODISS cited in the solicitation. Unless otherwise specified, the issues of documents not listed in the DODISS are the issues of the documents cited in the solicitation.

INSTITUTE OF ELECTRICAL AND ELECTRONICS ENGINEERS (IEEE)

IEEE Standard 1149.1 - IEEE Standard Test Access Port and Boundary Scan Architecture.

(Applications for copies should be addressed to the Institute of Electrical and Electronics Engineers, 445 Hoes Lane, Piscataway, NJ 08854-4150.)

(Non-Government standards and other publications are normally available from the organizations that prepare or distribute the documents. These documents may also be available in or through libraries or other informational services.)

2.3 Order of precedence. In the event of a conflict between the text of this drawing and the references cited herein, the text of this drawing shall take precedence.

1/ Values will be added when they become available.

Powered by ICminer.com Electronic-Library Service CopyRight 2003

3. REQUIREMENTS

3.1 Item requirements. The individual item requirements for device class M shall be in accordance with 1.2.1 of MIL-STD-883, "Provisions for the use of MIL-STD-883 in conjunction with compliant non-JAN devices" and as specified herein. The individual item requirements for device classes Q and V shall be in accordance with MIL-I-38535, the device manufacturer's Quality Management (QM) plan, and as specified herein.

3.2 Design, construction, and physical dimensions. The design, construction, and physical dimensions shall be as specified in MIL-STD-883 (see 3.1 herein) for device class M and MIL-I-38535 for device classes Q and V and herein.

3.2.1 Case outline(s). The case outline(s) shall be in accordance with 1.2.4 herein.

3.2.2 Terminal connections. The terminal connections shall be as specified on figure 1.

3.2.3 Truth table. The truth table shall be as specified on figure 2.

3.2.4 Block diagram. The block diagram shall be as specified on figure 3.

3.2.5 Test access port controller and scan test registers. The test access port (TAP) controller and scan test registers shall be as specified on figure 4.

3.2.6 Switching waveforms and test circuit. The switching waveforms and test circuit shall be as specified on figure 5.

3.3 Electrical performance characteristics and postirradiation parameter limits. Unless otherwise specified herein, the electrical performance characteristics and postirradiation parameter limits are as specified in table I and shall apply over the full case operating temperature range. Test conditions for these specified characteristics and limits are as specified in table I.

3.4 Electrical test requirements. The electrical test requirements shall be the subgroups specified in table II. The electrical tests for each subgroup are defined in table I.

3.5 Marking. The part shall be marked with the PIN listed in 1.2 herein. Marking for device class M shall be in accordance with MIL-STD-883 (see 3.1 herein). In addition, the manufacturer's PIN may also be marked as listed in MIL-BUL-103. Marking for device classes Q and V shall be in accordance with MIL-I-38535.

3.5.1 Certification/compliance mark. The compliance mark for device class M shall be a "C" as required in MIL-STD-883 (see 3.1 herein). The certification mark for device classes Q and V shall be a "QML" or "Q" as required in MIL-I-38535.

3.6 Certificate of compliance. For device class M, a certificate of compliance shall be required from a manufacturer in order to be listed as an approved source of supply in MIL-BUL-103 (see 6.7.2 herein). For device classes Q and V, a certificate of compliance shall be required from a QML-38535 listed manufacturer in order to supply to the requirements of this drawing (see 6.7.1 herein). The certificate of compliance submitted to DESC-EC prior to listing as an approved source of supply for this drawing shall affirm that the manufacturer's product meets, for device class M the requirements of MIL-STD-883 (see 3.1 herein), or for device classes Q and V, the requirements of MIL-I-38535 and the requirements herein.

3.7 Certificate of conformance. A certificate of conformance as required for device class M in MIL-STD-883 (see 3.1 herein) or for device classes Q and V in MIL-I-38535 shall be provided with each lot of microcircuits delivered to this drawing.

3.8 Notification of change for device class M. For device class M, notification to DESC-EC of change of product (see 6.2 herein) involving devices acquired to this drawing is required for any change as defined in MIL-STD-973.

3.9 Verification and review for device class M. For device class M, DESC, DESC's agent, and the acquiring activity retain the option to review the manufacturer's facility and applicable required documentation. Offshore documentation shall be made available onshore at the option of the reviewer.

3.10 Microcircuit group assignment for device class M. Device class M devices covered by this drawing shall be in microcircuit group number 127 (see MIL-I-38535, appendix A).

3.11 IEEE 1149.1 compliance. This device shall be compliant with IEEE 1149.1.

Powered by ICminer.com Electronic-Library Service CopyRight 2003

TABLE I. Electrical performance characteristics.

Test and MIL-STD-883 test method 1/	Symbol	Test conditions 2/ $-55°C \le T_C \le +125°C$ $+4.5\ V \le V_{CC} \le +5.5\ V$ unless otherwise specified		V_{CC}	Group A subgroups	Limits 3/ Min	Limits 3/ Max	Unit
High level output voltage, TDO 3006	V_{OH1}	For all inputs affecting output under test V_{IN} = 2.0 V or 0.8 V	I_{OH} = -1.0 mA	4.5 V	1, 2, 3	2.5		V
				4.75 V	1, 2, 3	2.7		
			I_{OH} = -3.0 mA	4.5 V	1, 2, 3	2.4		
High level output voltage, any Q 3006	V_{OH2}		I_{OH} = -3.0 mA	4.5 V	1, 2, 3	2.4		
				4.75 V	1, 2, 3	2.7		
			I_{OH} = -12.0 mA	4.5 V	1, 2, 3	2.0		
Low level output voltage, TDO 3007	V_{OL1}	For all inputs affecting output under test V_{IN} = 2.0 V or 0.8 V	I_{OL} = 20 mA	4.5 V	1, 2, 3		0.5	V
Low level output voltage, any Q 3007	V_{OL2}		I_{OL} = 48 mA	4.5 V	1, 2, 3		0.55	
Negative input clamp voltage 3022	V_{IC-}	For input under test, I_{IN} = -18 mA		4.5 V	1, 2, 3		-1.2	V
Input current high 3010	I_{IH1}	For input under test, V_{IN} = 5.5 V		5.5 V	1, 2, 3		100	µA
	I_{IH2}	For input under test, V_{IN} = 2.7 V		5.5 V	1, 2, 3	-1.0	-100	
Double input current high 3010	I_{IHH}	V_{IN} = 10.0 V	TMS	5.5 V	1, 2, 3		1.0	mA
Input current low 3009	I_{IL}	For input under test, V_{IN} = 0.5 V		5.5 V	1, 2, 3		-200	µA
Off-state output leakage current high 3021	I_{OZH}	For control input affecting output under test, V_{IN} = 2.0 V V_{OUT} = 2.7 V	TDO	5.5 V	1, 2, 3	-1.0	-100	µA
			Any Q		1, 2, 3		50	
Off-state output leakage current low 3020	I_{OZL}	For control input affecting output under test, V_{IN} = 2.0 V V_{OUT} = 0.5 V	TDO	5.5 V	1, 2, 3		-200	µA
			Any Q		1, 2, 3		-50	
Output short circuit current 3011	I_{OS} 4/	V_{OUT} = 0.0 V		5.5 V	1, 2, 3	-100	-225	mA

See footnotes at end of table.

Powered by ICminer.com Electronic-Library Service CopyRight 2003

TABLE I. Electrical performance characteristics - Continued.

Test and MIL-STD-883 test method 1/	Symbol	Test conditions 2/ $-55°C \le T_C \le +125°C$ $+4.5\ V \le V_{CC} \le +5.5\ V$ unless otherwise specified	V_{CC}	Group A subgroups	Limits 3/		Unit
					Min	Max	
Supply current, outputs high 3005	I_{CCH}	For all inputs, $V_{IN} = V_{CC}$ or GND V_{OUT} = open	5.5 V	1, 2, 3		7.0	mA
Supply current, outputs low 3005	I_{CCL}		5.5 V	1, 2, 3		52.0	
Supply current, outputs disabled 3005	I_{CCZ}		5.5 V	1, 2, 3		3.5	
Functional test	5/	V_{IH} = 2.0 V, V_{IL} = 0.8 V Verify output V_O See 4.4.1b	4.5 V	7, 8	L	H	
			5.5 V	7, 8	L	H	
NORMAL MODE							
Propagation delay time, CLK to nQ 3003	t_{PLH1} 6/	C_L = 50 pF minimum R_L = 500Ω See figure 5	5.0 V	9	3.0	8.5	ns
			4.5 V and 5.5 V	10, 11	3.0	10.5	
	t_{PHL1} 6/		5.0 V	9	3.0	8.0	
			4.5 V and 5.5 V	10, 11	3.0	10.0	
Propagation delay time, output enable, OE to nQ 3003	t_{PZH1} 6/		5.0 V	9	3.0	8.5	ns
			4.5 V and 5.5 V	10, 11	3.0	10.5	
	t_{PZL1} 6/		5.0 V	9	3.5	10.5	
			4.5 V and 5.5 V	10, 11	3.5	12.5	
Propagation delay time, output disable, OE to nQ 3003	t_{PHZ1} 6/		5.0 V	9	3.0	8.0	ns
			4.5 V and 5.5 V	10, 11	3.0	10.0	
	t_{PLZ1} 6/		5.0 V	9	2.5	7.5	
			4.5 V and 5.5 V	10, 11	2.5	9.5	

See footnotes at end of table.

Powered by ICminer.com Electronic-Library Service CopyRight 2003

TABLE I. Electrical performance characteristics - Continued.

Test and MIL-STD-883 test method 1/	Symbol	Test conditions 2/ $-55°C \le T_C \le +125°C$ $+4.5\ V \le V_{CC} \le +5.5\ V$ unless otherwise specified	V_{CC}	Group A subgroups	Limits 3/		Unit
					Min	Max	
Maximum CLK frequency	f_{MAX1}	C_L = 50 pF minimum R_L = 500Ω See figure 5	5.0 V	9	70		MHz
			4.5 V and 5.5 V	10, 11	70		
TEST MODE							
Propagation delay time, TCK↓ to nQ 3003	t_{PLH2} 6/	C_L = 50 pF minimum R_L = 500Ω See figure 5	5.0 V	9	6.0	15.5	ns
			4.5 V and 5.5 V	10, 11	6.0	21.5	
	t_{PHL2} 6/		5.0 V	9	6.0	15.5	
			4.5 V and 5.5 V	10, 11	6.0	21.5	
Propagation delay time, TCK↓ to TDO 3003	t_{PLH3} 6/		5.0 V	9	3.5	10.5	ns
			4.5 V and 5.5 V	10, 11	3.5	14.0	
	t_{PHL3} 6/		5.0 V	9	3.5	10.5	
			4.5 V and 5.5 V	10, 11	3.5	13.0	
Propagation delay time, TCK↑ to nQ 3003	t_{PLH4} 6/		5.0 V	9	7.5	20.0	ns
			4.5 V and 5.5 V	10, 11	7.5	28.0	
	t_{PHL4} 6/		5.0 V	9	7.5	21.0	
			4.5 V and 5.5 V	10, 11	7.5	29.0	

See footnotes at end of table.

Powered by ICminer.com Electronic-Library Service CopyRight 2003

TABLE I. Electrical performance characteristics - Continued.

Test and MIL-STD-883 test method 1/	Symbol	Test conditions 2/ $-55°C \le T_C \le +125°C$ $+4.5\ V \le V_{CC} \le +5.5\ V$ unless otherwise specified	V_{CC}	Group A subgroups	Limits 3/		Unit
					Min	Max	
Propagation delay time, output enable, TCK↓ to nQ 3003	t_{PZH2} 6/	C_L = 50 pF minimum R_L = 500Ω See figure 5	5.0 V	9	6.5	17.0	ns
			4.5 V and 5.5 V	10, 11	6.5	24.0	
	t_{PZL2} 6/		5.0 V	9	7.0	20.0	
			4.5 V and 5.5 V	10, 11	7.0	26.0	
Propagation delay time, output enable, TCK↓ to TDO 3003	t_{PZH3} 6/		5.0 V	9	3.5	10.5	ns
			4.5 V and 5.5 V	10, 11	3.5	11.5	
	t_{PZL3} 6/		5.0 V	9	4.0	11.0	
			4.5 V and 5.5 V	10, 11	4.0	13.5	
Propagation delay time, output enable, TCK↑ to nQ 3003	t_{PZH4} 6/		5.0 V	9	8.0	22.0	ns
			4.5 V and 5.5 V	10, 11	8.0	30.0	
	t_{PZL4} 6/		5.0 V	9	8.0	25.0	
			4.5 V and 5.5 V	10, 11	8.0	32.0	
Propagation delay time, output disable, TCK↓ to nQ 3003	t_{PHZ2} 6/		5.0 V	9	6.0	18.0	ns
			4.5 V and 5.5 V	10, 11	6.0	24.0	
	t_{PLZ2} 6/		5.0 V	9	6.0	17.0	
			4.5 V and 5.5 V	10, 11	6.0	23.0	

See footnotes at end of table.

Powered by ICminer.com Electronic-Library Service CopyRight 2003

TABLE I. Electrical performance characteristics - Continued.

Test and MIL-STD-883 test method 1/	Symbol	Test conditions 2/ $-55°C \le T_C \le +125°C$ $+4.5\ V \le V_{CC} \le +5.5\ V$ unless otherwise specified	V_{CC}	Group A subgroups	Limits 3/		Unit
					Min	Max	
Propagation delay time, output disable, TCK↓ to TDO 3003	t_{PHZ3} 6/	C_L = 50 pF minimum R_L = 500Ω See figure 5	5.0 V	9	3.0	11.5	ns
			4.5 V and 5.5 V	10, 11	3.0	13.0	
	t_{PLZ3} 6/		5.0 V	9	3.0	10.0	
			4.5 V and 5.5 V	10, 11	3.0	13.0	
Propagation delay time, output disable, TCK↑ to nQ 3003	t_{PHZ4} 6/		5.0 V	9	8.0	22.0	ns
			4.5 V and 5.5 V	10, 11	8.0	31.0	
	t_{PLZ4} 6/		5.0 V	9	8.0	22.0	
			4.5 V and 5.5 V	10, 11	8.0	31.0	
Maximum TCK frequency	f_{MAX2}		5.0 V	9	20		MHz
			4.5 V and 5.5 V	10, 11	20		

1/ For tests not listed in the referenced MIL-STD-883, utilize the general test procedure of 883 under the conditions listed herein.

2/ Each input/output, as applicable, shall be tested at the specified temperature, for the specified limits, to the tests in table I herein. Output terminals not designated shall be high level logic, low level logic, or open, except for all I_{CC} tests, where the output terminals shall be open. When performing these tests, the current meter shall be placed in the circuit such that all current flows through the meter. For input terminals not designated, V_{IN} = GND or $V_{IN} \ge 3.0$ V.

3/ For negative and positive voltage and current values, the sign designates the potential difference in reference to GND and the direction of current flow, respectively, and the absolute value of the magnitude, not the sign, is relative to the minimum and maximum limits, as applicable, listed herein. All devices shall meet or exceed the limits specified in table I at $4.5\ V \le V_{CC} \le 5.5\ V$.

4/ Not more than one output should be tested at one time, and the duration of the test condition should not exceed one second.

5/ Tests shall be performed in sequence, attributes data only. Functional tests shall include the truth table and other logic patterns used for fault detection. The test vectors used to verify the truth table shall, at a minimum, test all functions of each input and output. All possible input to output logic patterns per function shall be guaranteed, if not tested, to the truth table in figure 2 herein. Functional tests shall be performed in sequence as approved by the qualifying activity on qualified devices. After incorporating allowable tolerances per MIL-STD-883, V_{IL} = 0.4 V and V_{IH} = 2.4 V. For outputs, L ≤ 0.8 V, H ≥ 2.0 V.

6/ For propagation delay tests, all paths must be tested.

Powered by ICminer.com Electronic-Library Service CopyRight 2003

Device type	01				
Case outlines	L	3	Case outlines	L	3
Terminal number	Terminal symbol		Terminal number	Terminal symbol	
1	CLK	NC	15	8D	NC
2	1Q	5D	16	7D	5Q
3	2Q	4D	17	6D	6Q
4	3Q	3D	18	V_{CC}	7Q
5	4Q	2D	19	5D	8Q
6	GND	1D	20	4D	TDO
7	5Q	OE	21	3D	TMS
8	6Q	NC	22	2D	NC
9	7Q	CLK	23	1D	TCK
10	8Q	1Q	24	OE	TDI
11	TDO	2Q	25	---	8D
12	TMS	3Q	26	---	7D
13	TCK	4Q	27	---	6D
14	TDI	GND	28	---	V_{CC}

NC = No internal connection

Terminal descriptions	
Terminal symbol	Description
nD (n = 1 to 8)	Data inputs
nQ (n = 1 to 8)	Outputs
$\overline{OE}$	Output enable control input
CLK	Clock input
TDI	Test data input
TDO	Test data output
TMS	Test mode select input
TCK	Test clock input

FIGURE 1. Terminal connections.

Device type 01			
Inputs			Outputs
$\overline{OE}$	CLK	nD	nQ
L	↑	H	H
L	↑	L	L
L	L	X	Q_0
H	X	X	Z

H = High voltage level
L = Low voltage level
X = Irrelevant
Z = High impedance
↑ = Low-to-high clock transition
Q_0 = The level of Q before the indicated steady-state input conditions were established

FIGURE 2. Truth table.

Powered by ICminer.com Electronic-Library Service CopyRight 2003

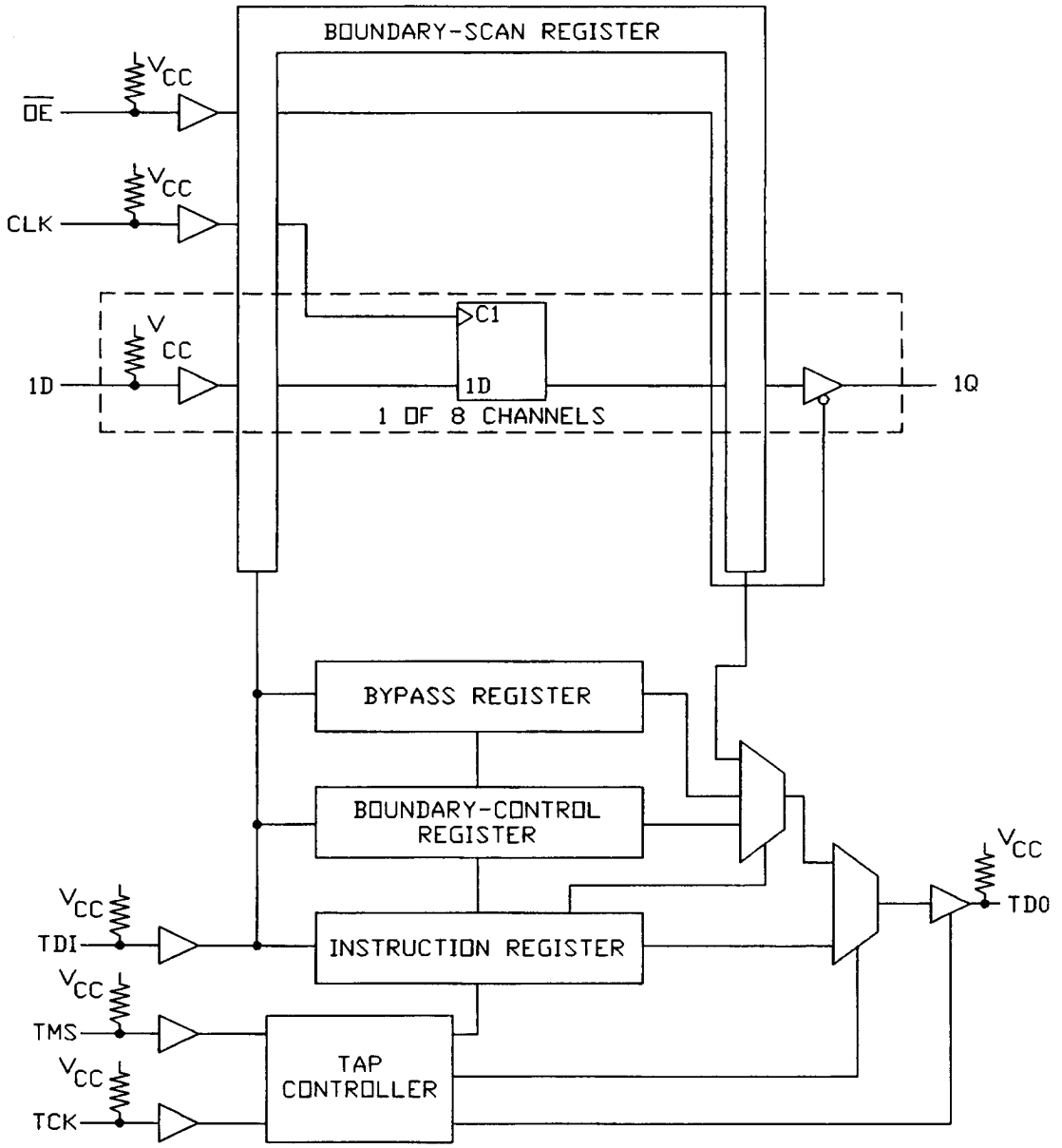

FIGURE 3. Block diagram.

Powered by ICminer.com Electronic-Library Service CopyRight 2003

Test access port (TAP) controller state diagram

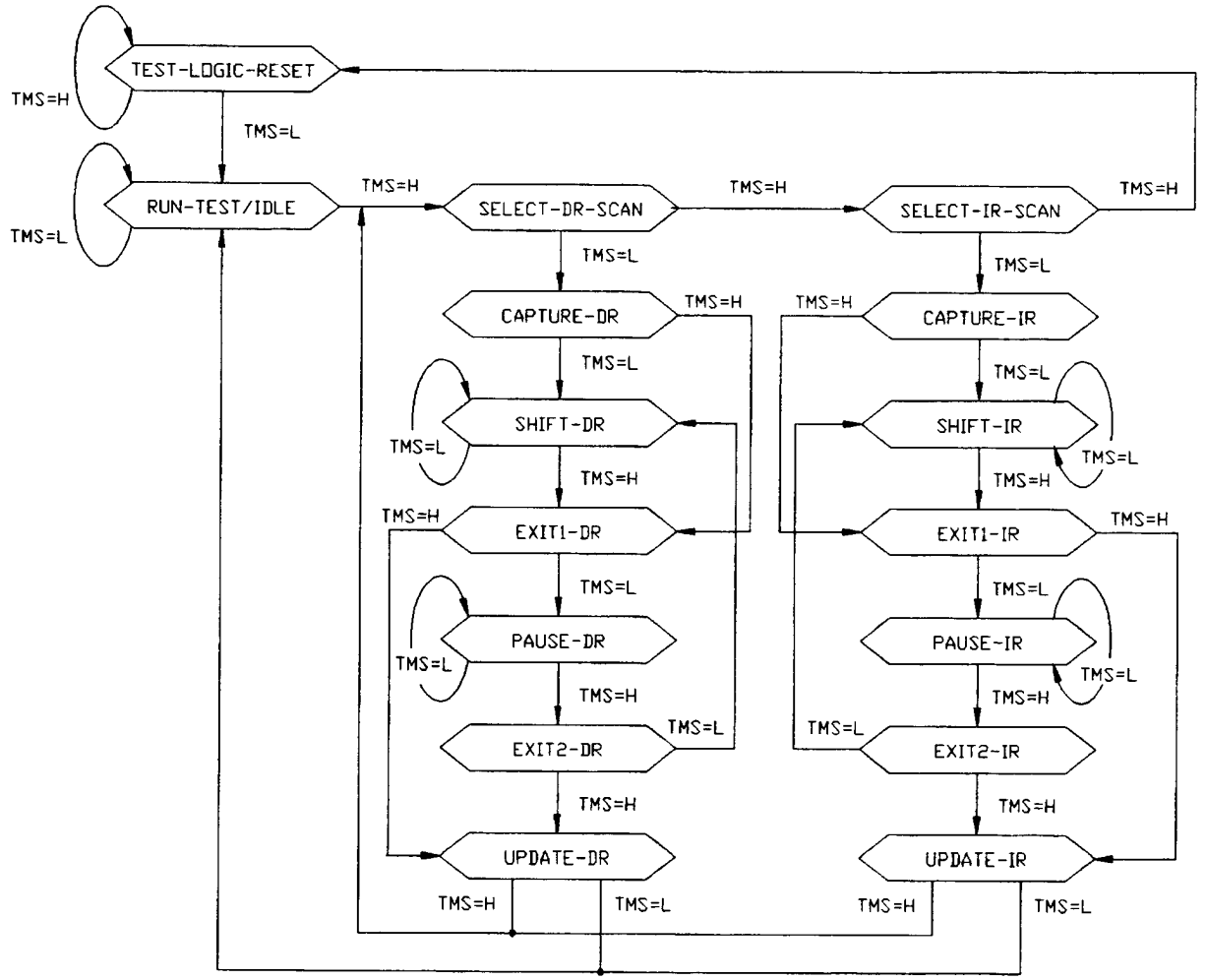

FIGURE 4. Test access port controller and scan test registers.

Powered by ICminer.com Electronic-Library Service CopyRight 2003

Instruction register (IR) order of scan

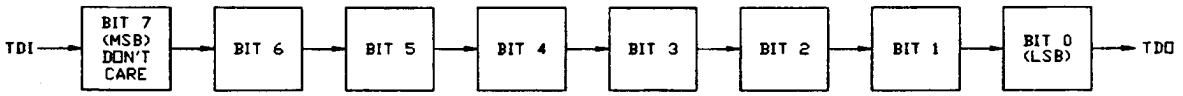

NOTE: During capture-IR, the IR captures the binary value 10000001. At power up or in the test-logic-reset state, the IR is reset to the binary value 11111111, which selects the BYPASS instruction.

Instruction register opcodes

Binary code 1/ Bit 7 → Bit 0 MSB → LSB	SCOPE™ opcode	Description	Selected data register	Mode
X0000000	EXTEST	Boundary scan	Boundary scan	Test
X0000001	BYPASS 2/	Bypass scan	Bypass	Normal
X0000010	SAMPLE/PRELOAD	Sample boundary	Boundary scan	Normal
X0000011	INTEST	Boundary scan	Boundary scan	Test
X0000100	BYPASS 2/	Bypass scan	Bypass	Normal
X0000101	BYPASS 2/	Bypass scan	Bypass	Normal
X0000110	HIGHZ (TRIBYP)	Control boundary to high impedance	Bypass	Modified test
X0000111	CLAMP (SETBYP)	Control boundary to 1/0	Bypass	Test
X0001000	BYPASS 2/	Bypass scan	Bypass	Normal
X0001001	RUNT	Boundary run test	Bypass	Test
X0001010	READBN	Boundary read	Boundary scan	Normal
X0001011	READBT	Boundary read	Boundary scan	Test
X0001100	CELLTST	Boundary self test	Boundary scan	Normal
X0001101	TOPHIP	Boundary toggle outputs	Bypass	Test
X0001110	SCANCN	Boundary-control register scan	Boundary control	Normal
X0001111	SCANCT	Boundary-control register scan	Boundary control	Test
All others	BYPASS	Bypass scan	Bypass	Normal

1/ Bit 7 is a don't-care bit; X = don't care.
2/ The BYPASS instruction is executed in lieu of a SCOPE™ instruction that is not supported in this device.

FIGURE 4. Test access port controller and scan test registers - Continued.

Powered by ICminer.com Electronic-Library Service CopyRight 2003

Boundary-scan register (BSR) configuration

BSR bit number	Device signal	BSR bit number	Device signal	BSR bit number	Device signal
17	CLK	15	1D	7	1Q
16	$\overline{OE}$	14	2D	6	2Q
---	---	13	3D	5	3Q
---	---	12	4D	4	4Q
---	---	11	5D	3	5Q
---	---	10	6D	2	6Q
---	---	9	7D	1	7Q
---	---	8	8D	0	8Q

Boundary-control register (BCR) order of scan

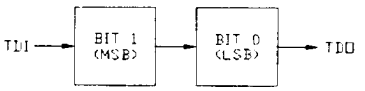

NOTE: During capture-DR (DR stands for data register), the contents of BCR are not changed. At power up or in the test-logic-reset state, the BCR is reset to the binary value 10, which selects the PSA test operation.

Boundary-control register opcodes

Binary code Bit 1 → Bit 0 MSB → LSB	Description
00	Sample inputs/toggle outputs (TOPSIP)
01	Pseudo-random pattern generation/16-bit mode (PRPG)
10	Parallel signature analysis/16-bit mode (PSA)
11	Simultaneous PSA and PRPG/8-bit mode (PSA/PRPG)

Bypass register order of scan

NOTE: During capture-DR, the bypass register captures a logic 0.

FIGURE 4. Test access port controller and scan test registers - Continued.

Powered by ICminer.com Electronic-Library Service CopyRight 2003

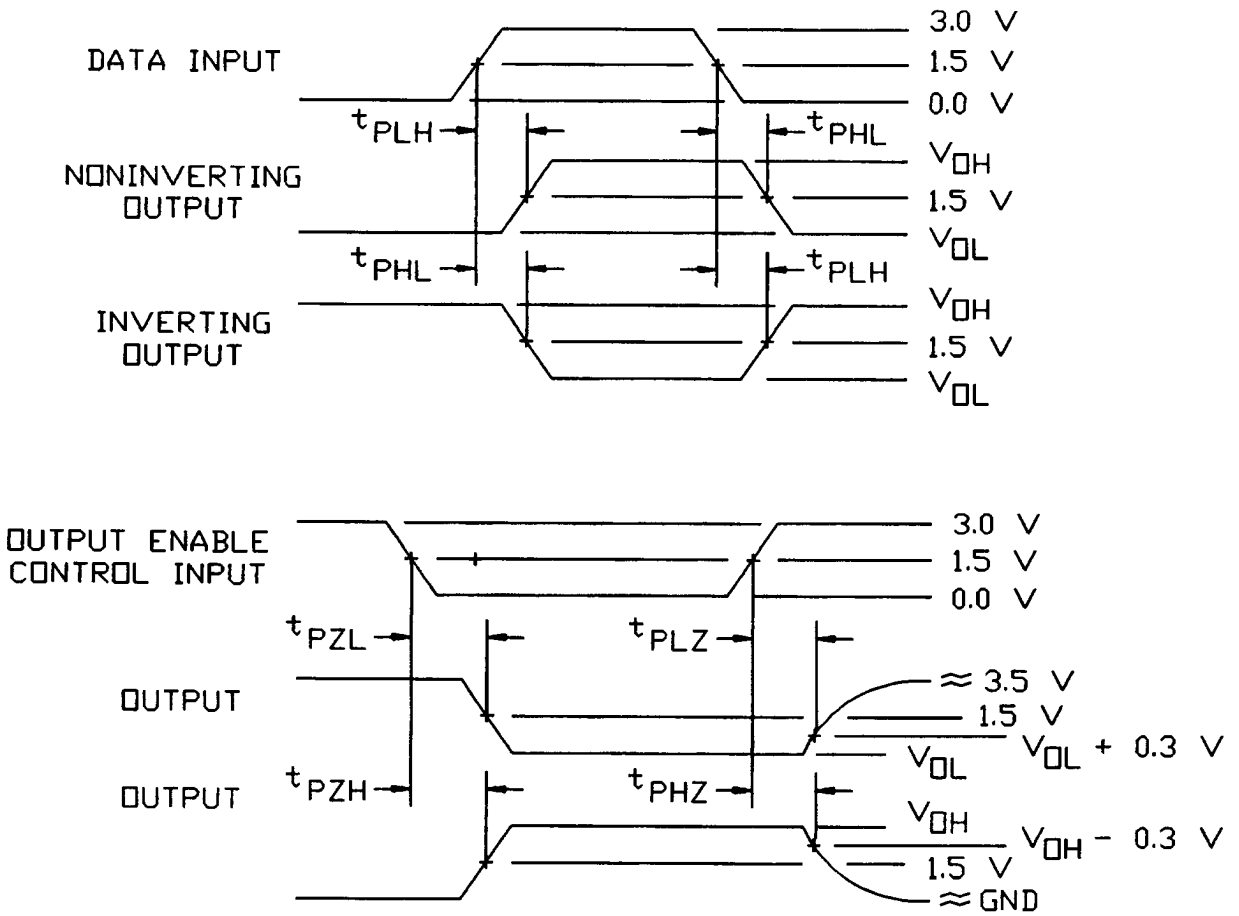

FIGURE 5. Switching waveforms and test circuit.

Powered by ICminer.com Electronic-Library Service CopyRight 2003

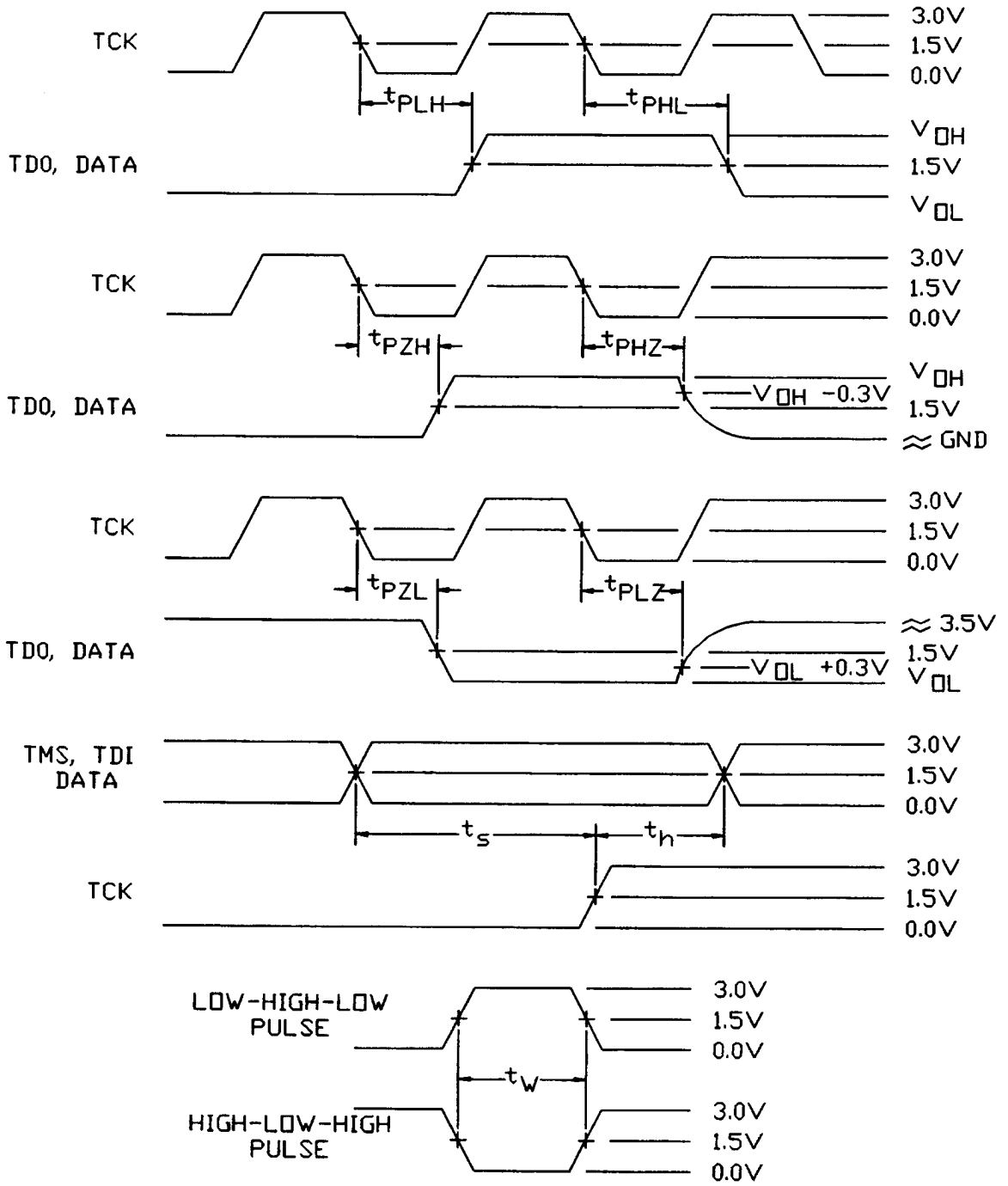

FIGURE 5. Switching waveforms and test circuit - Continued.

Powered by ICminer.com Electronic-Library Service CopyRight 2003

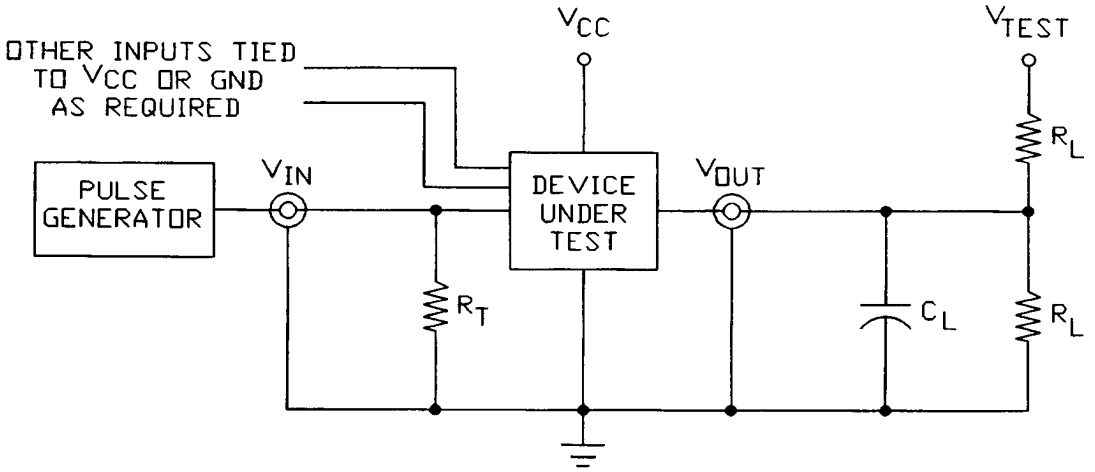

NOTES:

1. When measuring t_{PLZ} and t_{PZL}: V_{TEST} = 7.0 V.
2. When measuring t_{PHZ}, t_{PZH}, t_{PLH}, and t_{PHL}: V_{TEST} = open.
3. The t_{PZL} and t_{PLZ} reference waveform is for the output under test with internal conditions such that the output is at V_{OL} except when disabled by the output enable control. The t_{PZH} and t_{PHZ} reference waveform is for the output under test with internal conditions such that the output is at V_{OH} except when disabled by the output enable control.
4. C_L = 50 pF minimum or equivalent (includes test jig and probe capacitance).
5. R_L = 500Ω or equivalent.
6. R_T = 50Ω or equivalent.
7. Input signal from pulse generator: V_{IN} = 0.0 V to 3.0 V; PRR ≤ 10 MHz; t_r ≤ 2.5 ns; t_f ≤ 2.5 ns; t_r and t_f shall be measured from 0.3 V to 2.7 V and from 2.7 V to 0.3 V, respectively; duty cycle = 50 percent.
8. Timing parameters shall be tested at a minimum input frequency of 1 MHz.
9. The outputs are measured one at a time with one transition per measurement.

FIGURE 5. Switching waveforms and test circuit - Continued.

Powered by ICminer.com Electronic-Library Service CopyRight 2003

TABLE II. Electrical test requirements.

Test requirements	Subgroups (in accordance with MIL-STD-883, TM 5005, table I)	Subgroups (in accordance with MIL-I-38535, table III)	
	Device class M	Device class Q	Device class V
Interim electrical parameters (see 4.2)	---	1	1
Final electrical parameters (see 4.2)	1, 2, 3, 7, 8, 9, 10, 11 1/	1, 2, 3, 7, 8, 9, 10, 11 1/	1, 2, 3, 7, 8, 9, 10, 11 2/
Group A test requirements (see 4.4)	1, 2, 3, 7, 8, 9, 10, 11	1, 2, 3, 7, 8, 9, 10, 11	1, 2, 3, 7, 8, 9, 10, 11
Group C end-point electrical parameters (see 4.4)	1, 2, 3	1, 2, 3, 7, 8	1, 2, 3, 7, 8
Group D end-point electrical parameters (see 4.4)	1, 2, 3	1, 2, 3, 7, 8	1, 2, 3, 7, 8
Group E end-point electrical parameters (see 4.4)	1, 7, 9	1, 7, 9	1, 7, 9

1/ PDA applies to subgroup 1.
2/ PDA applies to subgroups 1 and 7.

4. QUALITY ASSURANCE PROVISIONS

4.1 Sampling and inspection. For device class M, sampling and inspection procedures shall be in accordance with MIL-STD-883 (see 3.1 herein). For device classes Q and V, sampling and inspection procedures shall be in accordance with MIL-I-38535 and the device manufacturer's QM plan.

4.2 Screening. For device class M, screening shall be in accordance with method 5004 of MIL-STD-883, and shall be conducted on all devices prior to quality conformance inspection. For device classes Q and V, screening shall be in accordance with MIL-I-38535, and shall be conducted on all devices prior to qualification and technology conformance inspection.

4.2.1 Additional criteria for device class M.

a. Burn-in test, method 1015 of MIL-STD-883.

(1) Test condition A, B, C or D. The test circuit shall be maintained by the manufacturer under document revision level control and shall be made available to the preparing or acquiring activity upon request. The test circuit shall specify the inputs, outputs, biases, and power dissipation, as applicable, in accordance with the intent specified in test method 1015.

(2) T_A = +125°C, minimum.

(3) For device class M, unless otherwise noted, method 1015 of MIL-STD-883 shall be followed.

Powered by ICminer.com Electronic-Library Service CopyRight 2003

4.2.2 Additional criteria for device classes Q and V.

a. The burn-in test duration, test condition and test temperature, or approved alternatives shall be as specified in the device manufacturer's QM plan in accordance with MIL-I-38535. The burn-in test circuit shall be maintained under document revision level control of the device manufacturer's Technology Review Board (TRB) in accordance with MIL-I-38535 and shall be made available to the preparing or acquiring activity upon request. The test circuit shall specify the inputs, outputs, biases, and power dissipation, as applicable, in accordance with the intent specified in test method 1015.

b. Interim and final electrical test parameters shall be as specified in table II herein.

c. Additional screening for device class V beyond the requirements of device class Q shall be as specified in appendix B of MIL-I-38535.

4.3 Qualification inspection for device classes Q and V. Qualification inspection for device classes Q and V shall be in accordance with MIL-I-38535. Inspections to be performed shall be those specified in MIL-I-38535 and herein for groups A, B, C, D, and E inspections (see 4.4.1 through 4.4.4).

4.3.1 Electrostatic discharge sensitivity qualification inspection. Electrostatic discharge sensitivity (ESDS) testing shall be performed in accordance with MIL-STD-883, method 3015. ESDS testing shall be measured only for initial qualification and after process or design changes which may affect ESDS classification.

4.4 Conformance inspection. Quality conformance inspection for device class M shall be in accordance with MIL-STD-883 (see 3.1 herein) and as specified herein. Inspections to be performed for device class M shall be those specified in method 5005 of MIL-STD-883 and herein for groups A, B, C, D, and E inspections (see 4.4.1 through 4.4.4). Technology conformance inspection for classes Q and V shall be in accordance with MIL-I-38535 including groups A, B, C, D, and E inspections and as specified herein except where option 2 of MIL-I-38535 permits alternate in-line control testing.

4.4.1 Group A inspection.

a. Tests shall be as specified in table II herein.

b. For device class M, subgroups 7 and 8 tests shall be sufficient to verify the truth table in figure 2 herein. The test vectors used to verify the truth table shall, at a minimum, test all functions of each input and output. All possible input to output logic patterns per function shall be guaranteed, if not tested, to the truth table in figure 2 herein. For device classes Q and V, subgroups 7 and 8 shall include verifying the functionality of the device; these tests shall have been fault graded in accordance with MIL-STD-883, test method 5012 (see 1.5 herein).

4.4.2 Group C inspection. The group C inspection end-point electrical parameters shall be as specified in table II herein.

4.4.2.1 Additional criteria for device class M. Steady-state life test conditions, method 1005 of MIL-STD-883:

a. Test condition A, B, C or D. The test circuit shall be maintained by the manufacturer under document revision level control and shall be made available to the preparing or acquiring activity upon request. The test circuit shall specify the inputs, outputs, biases, and power dissipation, as applicable, in accordance with the intent specified in test method 1005.

b. T_A = +125°C, minimum.

c. Test duration: 1,000 hours, except as permitted by method 1005 of MIL-STD-883.

4.4.2.2 Additional criteria for device classes Q and V. The steady-state life test duration, test condition and test temperature, or approved alternatives shall be as specified in the device manufacturer's QM plan in accordance with MIL-I-38535. The test circuit shall be maintained under document revision level control of the device manufacturer's TRB in accordance with MIL-I-38535 and shall be made available to the preparing or acquiring activity upon request. The test circuit shall specify the inputs, outputs, biases, and power dissipation, as applicable, in accordance with the intent specified in test method 1005.

4.4.3 Group D inspection. The group D inspection end-point electrical parameters shall be as specified in table II herein.

Powered by ICminer.com Electronic-Library Service CopyRight 2003

4.4.4 Group E inspection. Group E inspection is required only for parts intended to be marked as radiation hardness assured (see 3.5 herein). RHA levels for device classes Q and V shall be M, D, R, and H and RHA levels for device class M shall be M and D.

a. End-point electrical parameters shall be as specified in table II herein.

b. For device class M, the devices shall be subjected to radiation hardness assured tests as specified in MIL-I-38535, appendix A, for the RHA level being tested. For device classes Q and V, the devices or test vehicle shall be subjected to radiation hardness assured tests as specified in MIL-I-38535 for the RHA level being tested. All device classes must meet the postirradiation end-point electrical parameter limits as defined in table I at T_A = +25°C ±5°C, after exposure, to the subgroups specified in table II herein.

c. When specified in the purchase order or contract, a copy of the RHA delta limits shall be supplied.

4.5 Methods of inspection. Methods of inspection shall be specified as follows:

4.5.1 Voltage and current. Unless otherwise specified, all voltages given are referenced to the microcircuit GND terminal. Currents given are conventional current and positive when flowing into the referenced terminal.

5. PACKAGING

5.1 Packaging requirements. The requirements for packaging shall be in accordance with MIL-STD-883 (see 3.1 herein) for device class M and MIL-I-38535 for device classes Q and V.

6. NOTES

6.1 Intended use. Microcircuits conforming to this drawing are intended for use for Government microcircuit applications (original equipment), design applications, and logistics purposes.

6.1.1 Replaceability. Microcircuits covered by this drawing will replace the same generic device covered by a contractor-prepared specification or drawing.

6.1.2 Substitutability. Device class Q devices will replace device class M devices.

6.2 Configuration control of SMD's. All proposed changes to existing SMD's will be coordinated with the users of record for the individual documents. This coordination will be accomplished in accordance with MIL-STD-973 using DD Form 1692, Engineering Change Proposal.

6.3 Record of users. Military and industrial users shall inform Defense Electronics Supply Center when a system application requires configuration control and which SMD's are applicable to that system. DESC will maintain a record of users and this list will be used for coordination and distribution of changes to the drawings. Users of drawings covering microelectronic devices (FSC 5962) should contact DESC-EC, telephone (513) 296-6047.

6.4 Comments. Comments on this drawing should be directed to DESC-EC, Dayton, Ohio 45444-5270, or telephone (513) 296-5377.

6.5 Abbreviations, symbols, and definitions. The abbreviations, symbols, and definitions used herein are defined in MIL-I-38535 and MIL-STD-1331, and as follows:

GND - - - - - - - - - - - - - - Ground zero voltage potential.
I_{CC} - - - - - - - - - - - - - - Supply current.
I_{IL} - - - - - - - - - - - - - - Input current low.
I_{IH} - - - - - - - - - - - - - - Input current high.
T_C - - - - - - - - - - - - - - Case temperature.
T_A - - - - - - - - - - - - - - Ambient temperature.
V_{CC} - - - - - - - - - - - - - - Positive supply voltage.
V_{IC-} - - - - - - - - - - - - - - Negative input clamp voltage.

Powered by ICminer.com Electronic-Library Service CopyRight 2003

6.6 One part - one part number system. The one part - one part number system described below has been developed to allow for transitions between identical generic devices covered by the three major microcircuit requirements documents (MIL-H-38534, MIL-I-38535, and 1.2.1 of MIL-STD-883) without the necessity for the generation of unique PIN's. The three military requirements documents represent different class levels, and previously when a device manufacturer upgraded military product from one class level to another, the benefits of the upgraded product were unavailable to the Original Equipment Manufacturer (OEM), that was contractually locked into the original unique PIN. By establishing a one part number system covering all three documents, the OEM can acquire to the highest class level available for a given generic device to meet system needs without modifying the original contract parts selection criteria.

Military documentation format	Example PIN under new system	Manufacturing source listing	Document listing
New MIL-H-38534 Standardized Military Drawings	5962-XXXXXZZ(H or K)YY	QML-38534	MIL-BUL-103
New MIL-I-38535 Standardized Military Drawings	5962-XXXXXZZ(Q or V)YY	QML-38535	MIL-BUL-103
New 1.2.1 of MIL-STD-883 Standardized Military Drawings.	5962-XXXXXZZ(M)YY	MIL-BUL-103	MIL-BUL-103

6.7 Sources of supply.

6.7.1 Sources of supply for device classes Q and V. Sources of supply for device classes Q and V are listed in QML-38535. The vendors listed in QML-38535 have submitted a certificate of compliance (see 3.6 herein) to DESC-EC and have agreed to this drawing.

6.7.2 Approved sources of supply for device class M. Approved sources of supply for class M are listed in MIL-BUL-103. The vendors listed in MIL-BUL-103 have agreed to this drawing and a certificate of compliance (see 3.6 herein) has been submitted to and accepted by DESC-EC.

Powered by ICminer.com Electronic-Library Service CopyRight 2003