AMP

FEATURES

- **L-Band Op. Freq.**
- **52 dB Gain**
- **61.7 dBm Pout**
- **45% Efficiency**
- **VSWR, Infinity to1 Withstand**

MODEL NO. CAMH9126

L-Band Power Amplifier

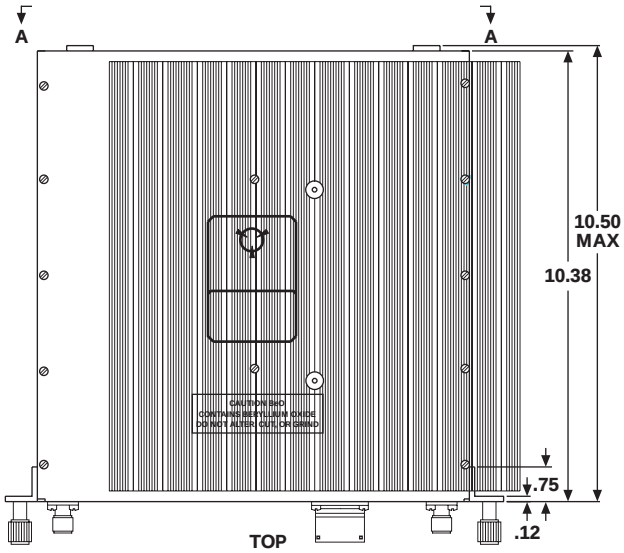

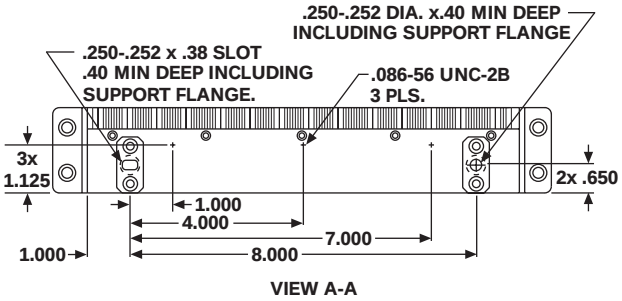

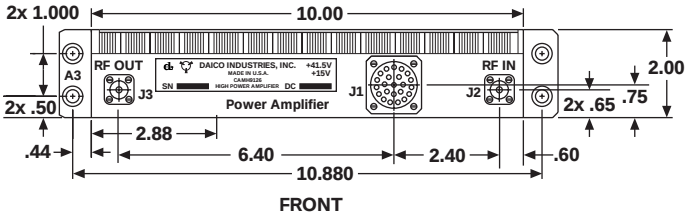

J1 Connector		
A GND (SHLD)	J N/C	T N/C
B MODIN +	K N/C	U +41.5VRT
C MODIN -	L N/C	V +41.5VRT
D N/C	M GND(SHLD)	W +41.5VRT
E PABIT +	N N/C	X +41.5V
F PABIT -	P ±15VRT	Y +41.5V
G PAOT +	R ±15VRT	Z +41.5V
H PAOT -	S +15V	

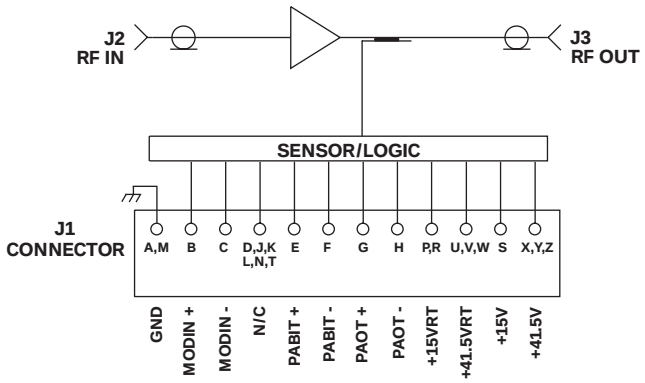

N/C = NO CONNECT

GUARANTEED PERFORMANCE

Parameter	Min	Typ	Max	Units	Conditions
Operating Frequency	1215		1400	MHz	
Gain	50	52		dB	
Peak Power Output	61	61.7	63	dBm	PRF 3.57 KHz PW = 15 µSec
RF Power In: *Operate*	+7	+10	+18	dBm	
No Damage			+20		
VSWR In		1.4:1	1.5:1		
Out		1.4:1	1.5:1		
Pulse Delay On	200	435	600	nSec	
Puse Delay Off	200	400	600	nSec	
Harmonics *II*	30	35		dBc	
III	30	38		dBc	
Impedance		50		OHMS	
Transition (Rise/Fall) Time	80	120	500	µSec	
DC Current		5.3	7.5	AMP	At +41.5 VDC
		0.45	0.7	AMP	At +15 VDC
Operating Temperature	-46	+25	+52	°C	TA