LEADERSHIP in Connector Design

KYCON

# RCA PHONO JACKS

# KLP42X Series

RoHS

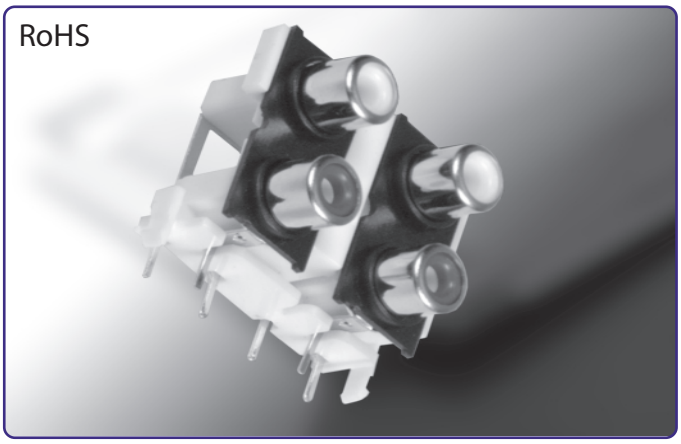

## *KLP42X Series*
## *Stacked RCA Phono Jack*
## *PCB Mount PCB*

## Features

- Audio Applications for Computers and Multimedia
- Gold Plating Available Upon Request
- Various Color and Stacking Options Available

## Performance Specifications

## Materials and Finish

**Housing:**

PBT Thermoplastic , UL94V-0 Rated,
**Terminals**: Brass, Tin Plating
**Operating Temperature** : -25˚C to +70˚C

## Documentation & Ordering Information

| | | |
|---|---|---|
| | | |
| | | |

| Kycon Part # | |
|---|---|

## Part Number Builder

Series – Type – Color

**Series**

KLP42X - Stacked RCA Phono Jack

| Type | Color Layout |
|---|---|
| 60 - Single Column, Double Row | 60 - X / Z |
| 61 - Double Column, Double Row | 61 - X, X1 / Z, Z1 |
| 62 - Triple Column, Double Row | 62 - X, Z / X1, Z1 / X2, Z2 |

**Color Option**

60 - B/B ,R/R ,R/W ,W/R ,W/W ,Y/Y

61 - BB/BB ,RR/WW ,WB/RY ,WR/BB ,WR/WR , WW/RR ,YW/YW ,YY/WW ,YY/YY ,RW/RW

62 - BY/RY/WY ,RR/WW/YY ,RW/RW/RW ,RW/RW/YY , WR/WR/WR ,WW/RR/YY ,YY/YY/YY

B - Black R - Red W - White Y - Yellow

Contact Kycon for more color and other Option

## KLP42X Series Dimensions

Dimensions in mm

### KLP42X-60

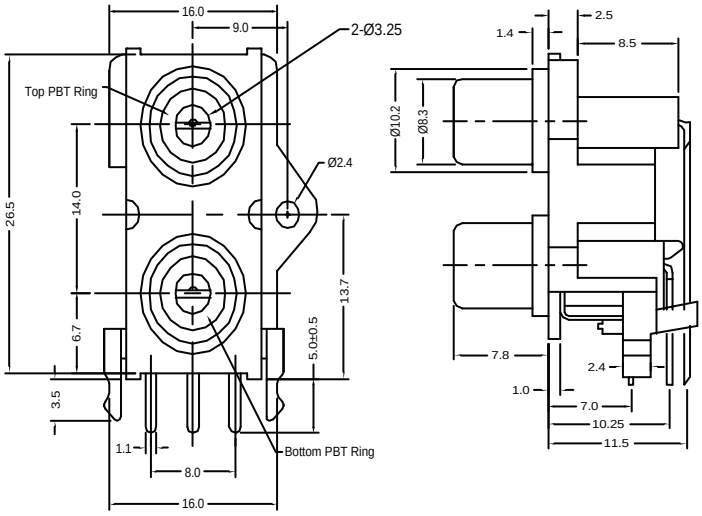


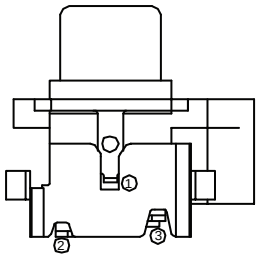
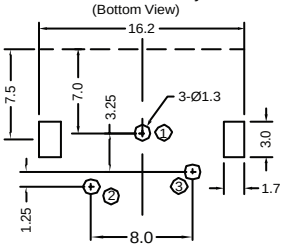
Recommended PCB Layout
(Bottom View)