0.8 mm PITCH CD-ROM CONNECTOR (MALE R/A DIP TYPE)

800183MR Series

Specifications:

- **50 Circuits**
- **Insulator Material** : High Temp. Plastic
- **Operating Temp. Range** : -40˚C to +105˚C
- **Terminal Material** : Phosphor Bronze
- **Plating** : Gold Plated
- **Max. Current Rating** : 0.5 A
- **Voltage Rating** : 100V AC
- **Dielectric Strength** : 500V (Min. 60 seconds)

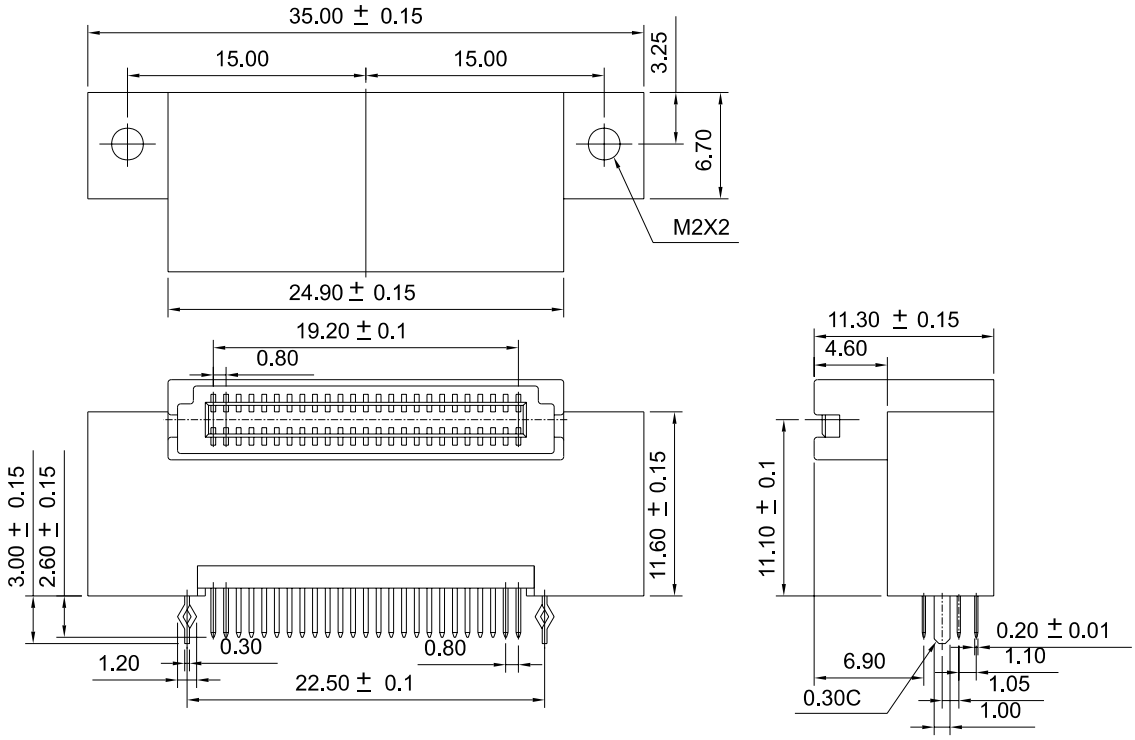

Order Information

800183MR050□□01PU
1 2 3 4 5

1. 'R' : Right Angle DIP Type
2. No. of Pins
3. Plating
4. Color 'P' : Warm Gray
5. Package
   'U' : Tube Package Without CAP

Reference Page 11
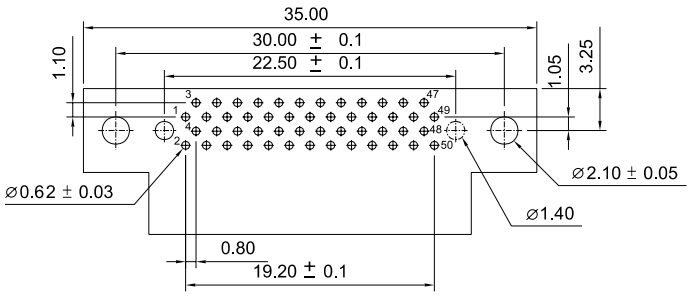
Recommended P.C.B. Layout