OMRON 103-469 → 474

General-purpose Limit Switch WL

Exceptionally Rugged Limit Switch With High Mechanical Strength

Wide range of actuator options to accommodate application requirements

Resistant construction (IP67) is oil-tight, waterproof and dustproof.

Actuator head can be mounted in any one of four directions

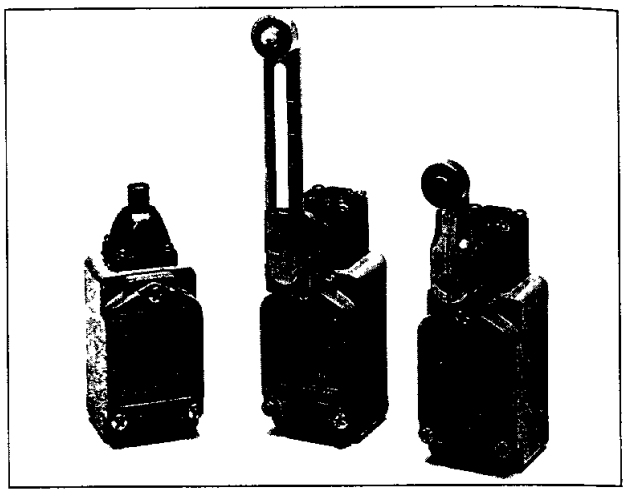

Ordering Information

Actuator type	Model
Adjustable roller lever	WLCA12-G
Short roller lever	WLCA2-G
Locking fork roller lever	WLCA32-41G
Adjustable rod lever	WLCL-G
Plain top plunger	WLD-G
Roller top plunger	WLD2-G
Plain side plunger	WLSD-G
Roller side plunger	WLSD2-G
Coil spring	WLNJ-G

Specifications

■ Characteristics

Operating speed		1 mm/s to 2 m/s (with Model WLCA2)
Operating frequency		Mechanical 120 operations/min Electrical 30 operations/min
Contact resistance		25 MΩ max (initial)
Insulation resistance		100 MΩ min (at 500 VDC)
Dielectric strength		1,000 VAC (600 V)*, 50/60 Hz for 1 minute between non-continuous terminals 2,200 VAC, 50/60 Hz for 1 minute between each terminal and non-current-carrying metal part and between each terminal and ground
Temperature rise		50 degrees max.
Vibration		Malfunction 10 to 55 Hz, 1 5-mm double amplitude
Shock		Mechanical durability approx 1,000 m/s^2 (approx 100 G) Malfunction durability approx 300 m/s^2 (approx 30 G)
Ambient temperature		Operating −10° to 80°C (with no icing)
Ambient humidity		95% RH max
Degree of protection	NEMA	Types 1, 2, 3, 3R, 4, 5, 6, 12 and 13
	IEC	IP67
	JIS	Immersion-proof
	UL	3, 4 and 13
Life expectancy		Mechanical 15,000,000 operations min Electrical See 'Engineering Data'
Weight		Approx 275 g (with Model WLCA2)

■ Contact Ratings

Rated voltage (V)	Non-inductive load (A)				Inductive load (A)			
	Resistive load		Lamp load		Inductive load		Motor load	
	NC	NO	NC	NO	NC	NO	NC	NO
125 VAC	10		3	1 5	10		5	2 5
250 VAC			2	1			3	1 5
480 VAC			1 5	0 8	3		1 5	0 8
600 VAC	3	1		0 5	1 5		1	0 5
8 VDC	10		6	3	10		6	
14 VDC								
30 VDC	6		4		6		4	
125 VDC	0 8		0 2	0 2	0 8		0 2	
250 VDC	0 4		0 1	0 1	0 4		0 1	

Contact form
Standard type, Microload type

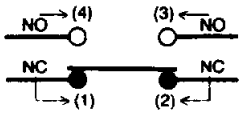

■ Operating Characteristics

Item	Model								
	WLCA12G	WLCA2G	WLCA3241G	WLCLG	WLDG	WLD2G	WLSDG	WLSD2G	WLNJG
Operating force (max)	13 34 N		11 77N	1 39N	26 7N		40 03N		1 47N
Releasing force (min)	2 23N		–	0 27N	8 92N		8 81N	8 89N	–
Pretravel (max)	15°±5°		50°±5°	15°±5°	1 7mm		2 8mm		20±10mm
Overtravel (min.)	30°		35°	30°	6 4mm	5 6mm	6 4mm	5 6mm	–
Movement differential (max)	12°		–	12°	1mm				
Total travel (min)	40°		90°±10°	40°	–				
Operating position	–				34±0 8mm	44±0 8mm	54 2± 0 8mm	54 1± 0 8mm	
Total travel position (max)					29 5mm	39 5mm	–		

13

Engineering Data

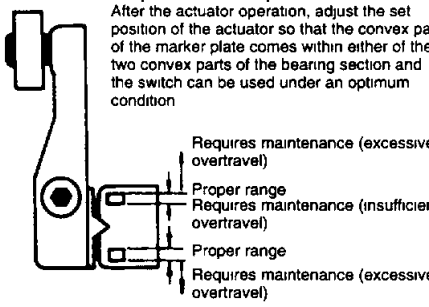

Set position marker plate
After the actuator operation, adjust the set position of the actuator so that the convex part of the marker plate comes within either of the two convex parts of the bearing section and the switch can be used under an optimum condition

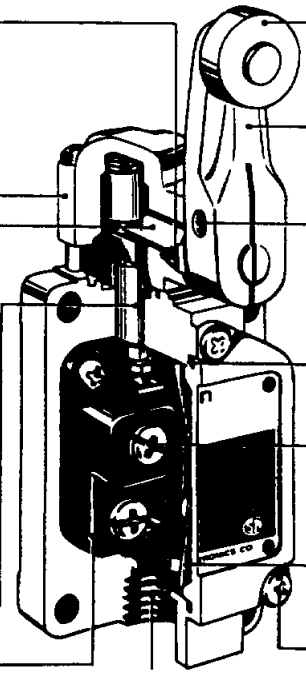

Head
The head used in the roller lever type, adjustable rod lever type, or horizontal plunger type (except the -2N series) can be mounted in any of the four directions by removing the screws at the four corners of the head

Shaft section seal
By fitting an O-ring to the rotary shaft and with an appropriate interference of the screws, high sealing property is maintained

Bearing
The bearing is an important part which smoothes the plunger movement

Built-in switch
The built-in switch (for all types except the microvoltage/current load type) has an extended mechanical life expectancy of 15 million operations or more

Roller
The roller is made of self-lubricating sintered stainless steel and boasts high resistance to wear

Lever
The lever forged of anti-corrosive aluminium alloy features high corrosion resistance and outstanding ruggedness

Roller lever setscrew

Cover seal
By using an O-ring as the cover seal, an optimum squeeze can be obtained and high sealing property is assured as well

Four M4 screws

Insulator
Thanks to the use of delta cloth as its material, the insulator excels in insulation resistance and prevents generation of any gases which may corrode internal parts

Cover setscrew
A phillips screw is employed to secure the cover with ease of use taken into account The cover is also provided with a means to prevent the screw from coming off

Dimensions

WLCA12

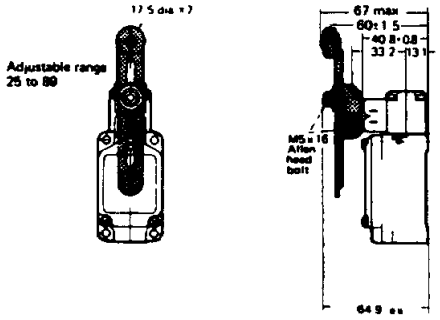

* Stainless sintered roller

WLCA2

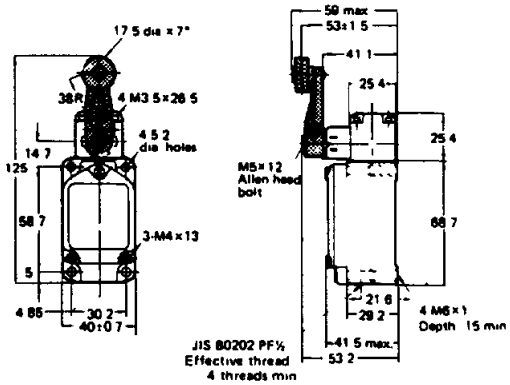

* Stainless sintered roller

WLCA32-41

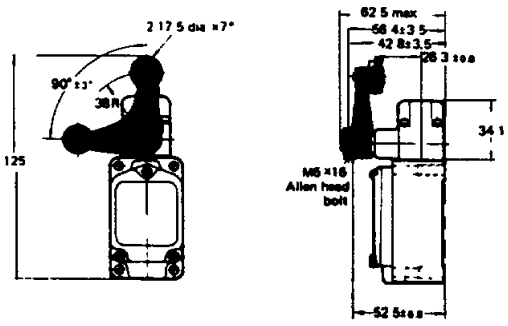

* Resin roller

WLCL

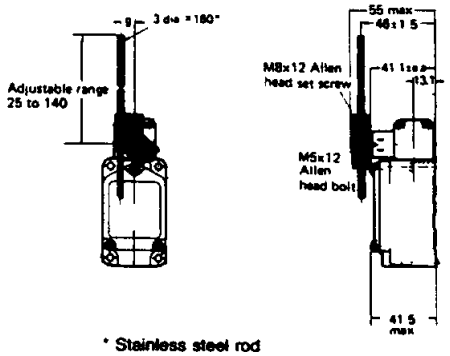

* Stainless steel rod

WLD

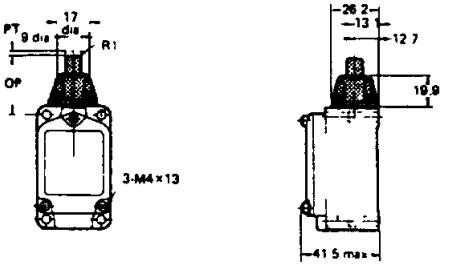

* Stainless sintered plunger

WLD2

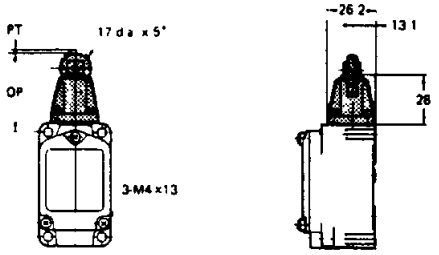

* Stainless sintered roller

WLSD

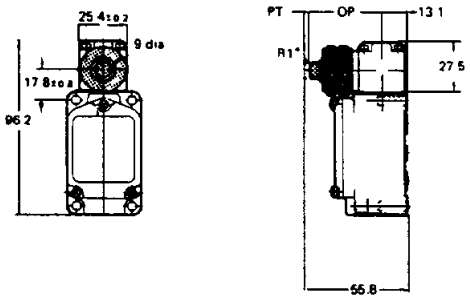

* Stainless steel plunger

WLSD2

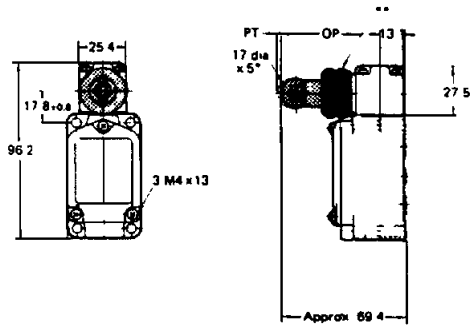

* Stainless steel roller
** Face nut (by loosening this nut, the direction of the roller may be changed arbitrarily)

WLNJ

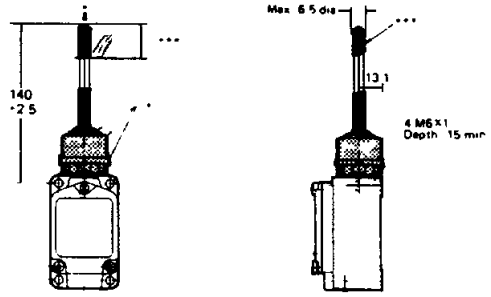

* The coil spring may be operated from any direction except axial direction (⬍)
** Rubber cap and clamping band
*** Stainless steel coil spring
**** Optimum operating range of the coil spring is within 1/3 of the entire length from the top end

Mounting holes

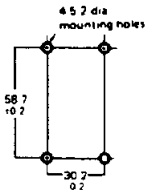

13

Operation

Operating direction can be varied

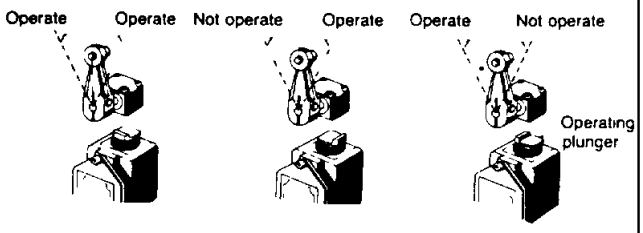

Applicable actuators Roller lever (WLCA□)
Rod level (WLCL)

Adjustable length of lever or rod

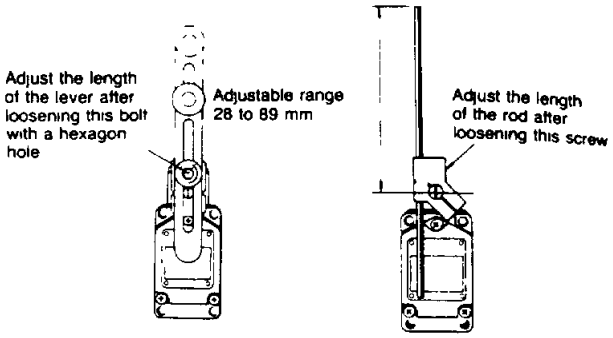

Applicable actuators Adjustable roller lever (WLCA12 etc)
Rod lever (WLCL etc)

Installation position of the actuator can be varied

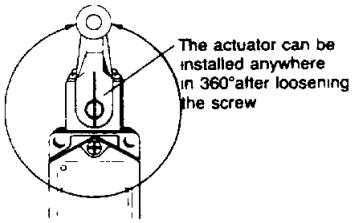

Applicable actuator
Roller lever (WLCA□)
Rod lever (WLCL)

Roller may be installed in the shaft side (inside)

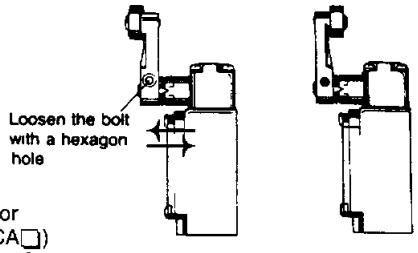

Applicable actuator
Roller lever (WLCA□)
Fork lever lock (WLCA32-4□)

Direction of the head can be varied

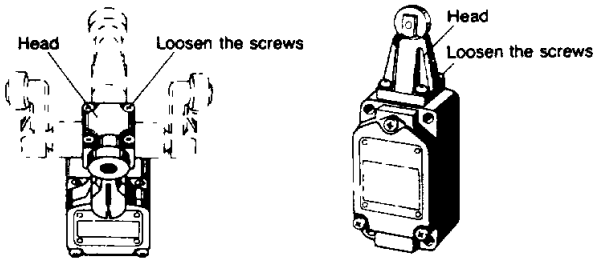

Applicable actuators Roller lever (WLCA□)
Rod level (WLCL)
Horizontal plunger (WLSD□)
Roller plunger (WLD2)