LG128642-DW 128 x 64 dots + white led backlight

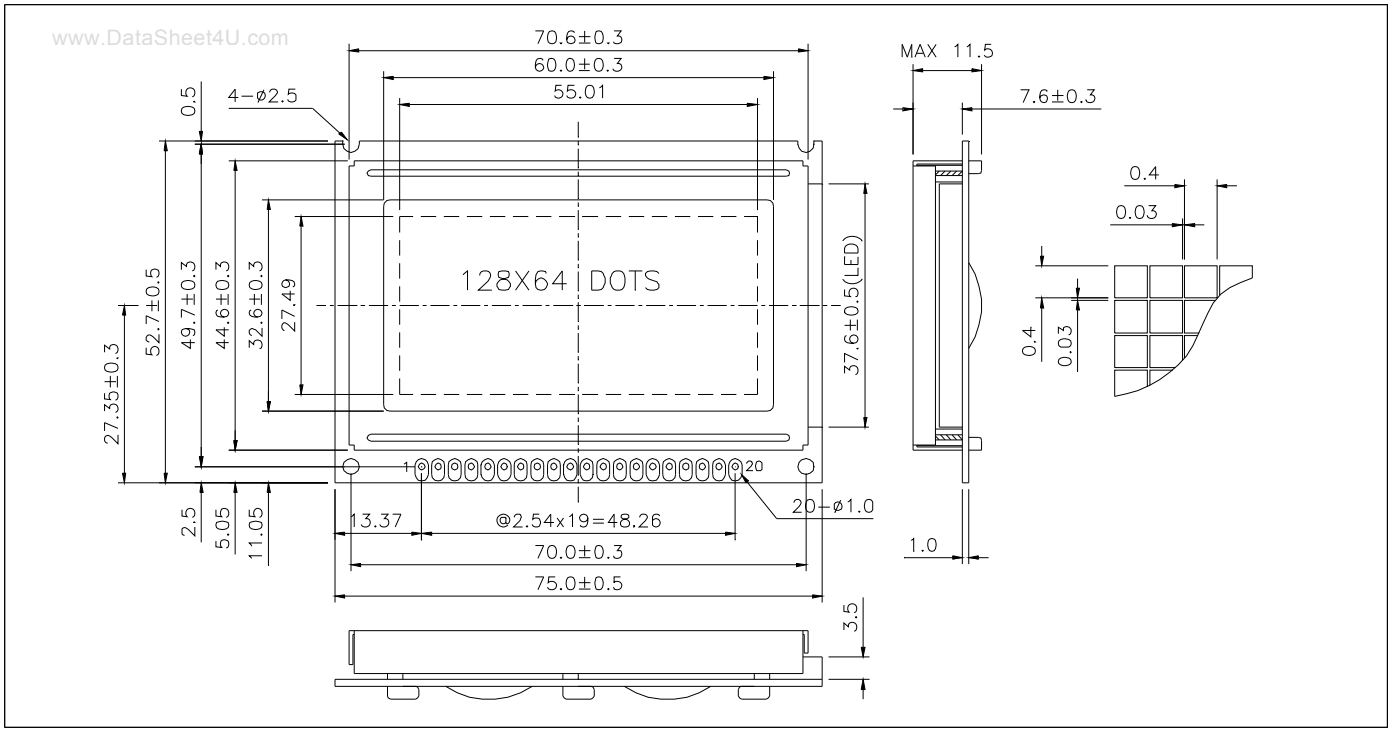

ABSOLUTE MAXIMUM RATINGS

Item	Symbol	Min.	Max.	Unit
Supply Voltage(Logic)	V_{DD} - V_{SS}	-0.3	7.0	V
Supply Voltage(LCD)	V_{DD} - V_O	-0.3	19.0	V
Input Voltage	V_I	-0.3	V_{DD} + 0.3	V
Operating Temp.	T_{opr}	-20	70	°C
Storage Temp.	T_{stg}	-30	80	°C

MECHANICAL DATA

Item	Nominal Dimensions	Unit
Module Size (W x H x T)	75.0 x 52.7 x 11.5	mm
Viewing Area (W x H)	60.0 x 32.6	mm
Dot Pitch (W x H)	0.43 x 0.43	mm
Dot Size (W x H)	0.40 x 0.40	mm
Weight	Approx. 45	g

ELECTRICAL CHARACTERISTICS (V_{DD}=5V±0.25V)

Item	Symbol	Test Condition	Min.	Typ.	Max.	Unit
Input High Voltage	V_{IH}	--	2.0	--	V_{DD}	V
Input Low Voltage	V_{IL}	--	- 0.3	--	0.8	V
Output High Voltage	V_{OH}	I_{OH} = - 0.2mA	2.4	--	V_{DD}	V
Output Low Voltage	V_{OL}	I_{OL} = 1.6mA	0	--	0.4	V
Supply Current	I_{DD}	V_{DD} = 5.0V	--	6.0	8.0	mA
LCD Driving Voltage	V_{DD} - V_O	Ta=25°C	--	11.2	--	V

PIN CONNECTIONS

Pin	Symbol	Level	Function
1	V_{DD}	+5V	Power supply for logic
2	V_{SS}	0V	GND
3	V_O	--	Operating voltage for LCD
4	DB0	H/L	Data bus line
5	DB1	H/L	
6	DB2	H/L	
7	DB3	H/L	
8	DB4	H/L	
9	DB5	H/L	
10	DB6	H/L	
11	DB7	H/L	
12	/CS1	L	Chip selection for IC1, active "L"
13	/CS2	L	Chip selection for IC2, active "L"
14	/RST	L	Reset signal, active "L"
15	R/W	H/L	H : Read L : Write
16	RS	H/L	H : Data L : Instruction code
17	E	H,H→L	Enable signal
18	V_{OUT}	-10V	Output voltage for LCD driving
19	LEDA	+5V	Power supply for LED backlight
20	LEDK	0V	

BLOCK DIAGRAM

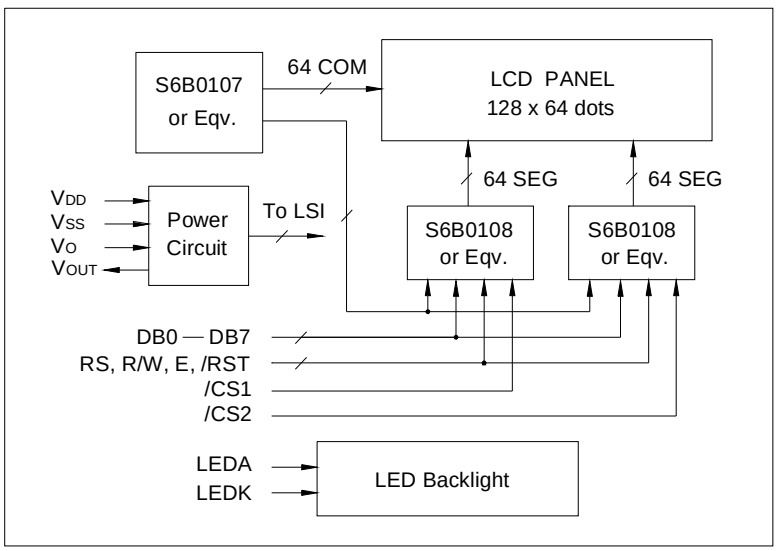

LED BACKLIGHT SPECIFICATIONS (Ta=25°C)

Item	Symbol	Typ.	Max.	Unit
Forward Voltage	V_f	3.1	3.3	V
Forward Current	I_f	45	--	mA
LED Color	White			

www.DataSheet4U.com