www.DataSheet4U.com

BOLYMIN

# BG12864A

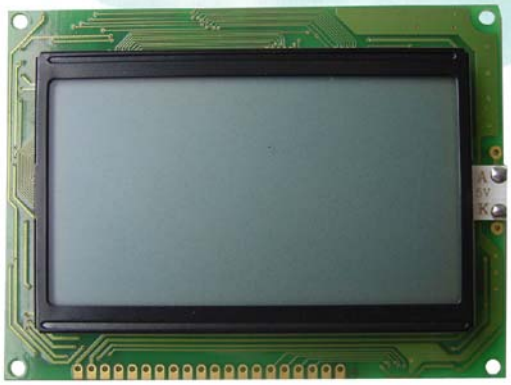

## Feature

1. COB with metal frame
2. Built-in controller KS107/108
3. +5V single power supply, with built-in negative voltage
4. 1/64 duty cycle
5. Option: Temperature compensation circuit
6. LED B/L Pins: 19/20, or A/K , or 1/2
7. Option: LED array/edge B/L, EL B/L
8. Option: +3V single power supply
9. Option: negative voltage (built-in, external)

## Mechanical Data

| Item | Standard Value | Unit |
|---|---|---|
| Module Dimension | 93.0 x 70.0 | mm |
| Viewing Area | 72.0 x 40.0 | mm |
| Dot Size | 0.48 x 0.48 | mm |
| Dot Pitch | 0.52 x 0.52 | mm |

## Pin Assignment

| Pin | Symbol | Function |
|---|---|---|
| 1 | Vss | GND |
| 2 | Vdd | + 5V(+3V option) |
| 3 | Vo | Contrast adjustment |
| 4 | D/I | Data/instruction |
| 5 | R/W | Data read/write |
| 6 | E | H -> L Enable signal |
| 7~14 | DB0~7 | Data bus line |
| 15 | CS1 | Chip select for IC1 |
| 16 | CS2 | Chip select for IC2 |
| 17 | /RST | Reset |
| 18 | Vee | Negative voltage output |
| 19 | A | Power supply for B/L (+) |
| 20 | K | Power supply for B/L (GND) |

## Electronic Characteristics

| Item | Symbol | Condition | Typical Value | Unit |
|---|---|---|---|---|
| Input Voltage | Vdd | Vdd = +5V | 5.0 | V |
| Supply Current | Idd | Vdd = +5V | 9.7 | mA |
| LCD Driving Voltage | Vdd-Vo | 25°C | 9 | V |
| LED Forward Voltage | Vf | 25°C | 4.2 | V |
| LED Forward Current | If | 25°C | 330 | mA |
| EL Power Voltage | Vel | Vel=110Vac/400Hz | | V |
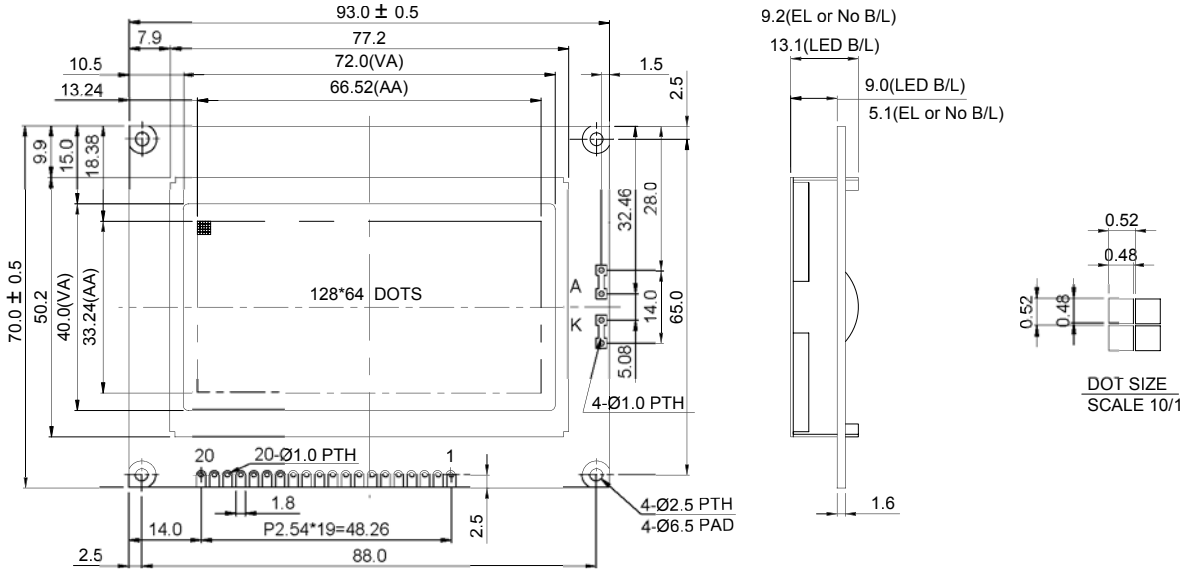
## Dimension