FEATURES

- **1215 - 1400 MHz**
- **22.5° LSB, 337.5° Range**
- **+35 dBm 3rd Order Intercept**
- **TTL Driver**
- **Replaceable SMA Connectors**

4 BIT

MODEL NO. CPS0827

Phase Shifter 4 Section

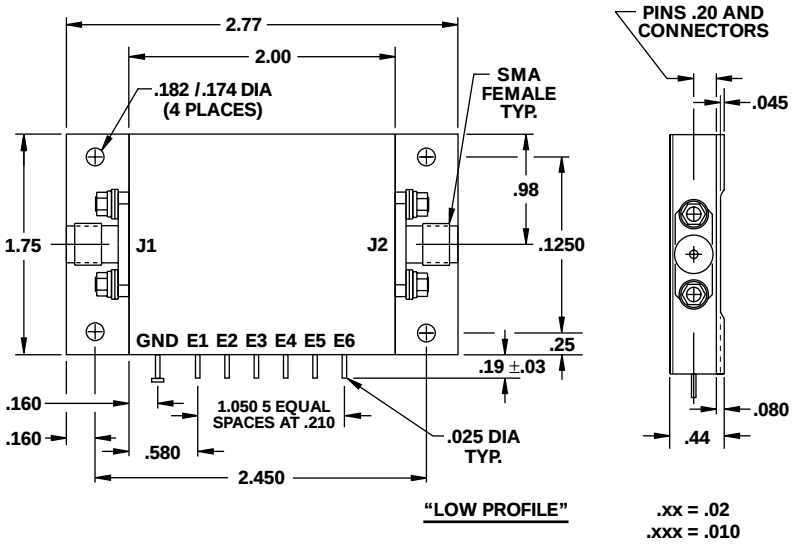

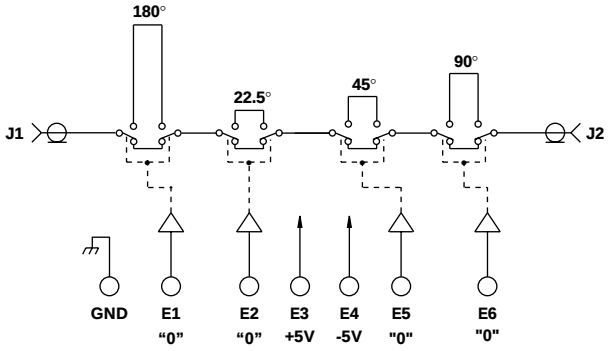

TYPICAL PERFORMANCE
at 25°C

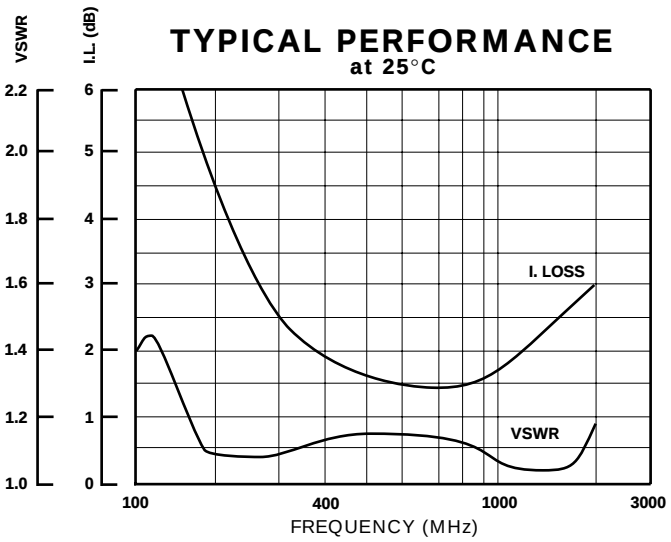

GUARANTEED PERFORMANCE

Parameter		Min	Typ	Max	Units	Conditions
Operating Frequency		1215		1400	MHz	
DC Current			83	250	mA	At +5 VDC Supply
			40	250	mA	At -5 VDC Supply
Control Type			TTL			4 Line Logic "0" = Reference Logic "1" = Phase Shift
Control Current	*High*		0	±20	µA	VIH = +2.7 V
	Low		0	±20	µA	VIL = +0.5 V
Insertion Loss		1.0	2.18	2.50	dB	At +25° C
		0.75	2.47	2.75	dB	At Temperature Extremes
Amplitude Stability			0.35	0.60	dB	Vs. Phase Shift
Time Delay		500	850	900	pSec	
Phase	*LSB*		22.5		DEG	
	Range	0		337.5	DEG	22.5, 45, 90, 180 At 1215 MHz
	Accuracy			±10	DEG	
	Linearity		1.5	3.0	DEG	
VSWR			1.2/1	1.5/1		
Impedance			50		OHMS	
Switching Speed			145	500	nSec	50% TTL to 90% / 10% RF
Transition (Rise/Fall) Time			105		nSec	90% / 10% or 10% / 90% RF
Switching (Video) Transients			135		mV	Peak Value
Intercept Points	*2nd*		+60		dBm	575 MHz / 400 MHz
	3rd		+35		dBm	287.5 MHz / 400 MHz
RF Power	*Operate*		+22	+20	dBm	0.2 dB Compression
	No Damage			+30	dBm	
Operating Temperature		-54	+25	+80	°C	TA