4,224” x 4,224” x 1,496” 120 x 120 x 38 mm

125DH9

ETRI®

DC Axial Fans

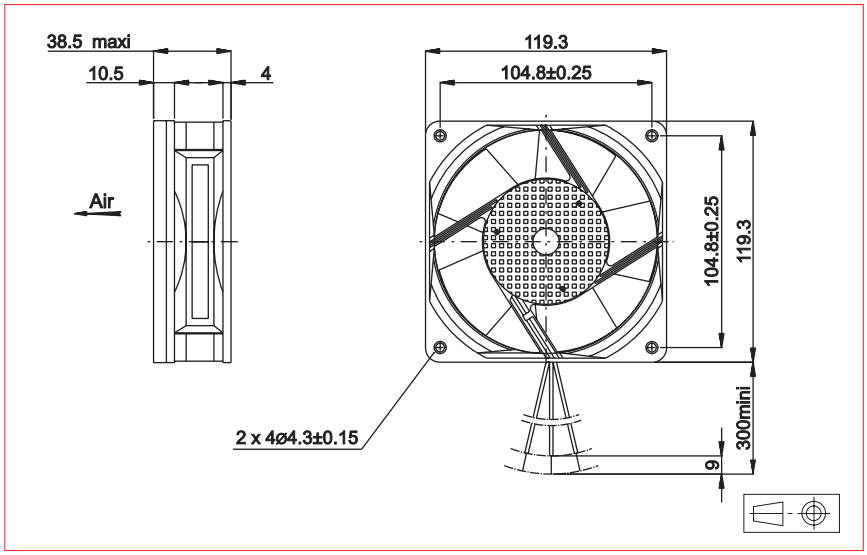

Approvals

CE

Life expectancy

L-10 LIFE AT 40°C:
80 000 hours

Brushless DC Motor
Electrical protection: impedance protected
Housing material: plastic UL 94 VO
Impeller material: plastic UL 94 VO
Weight: 280 g
Bearing system: ball bearings

Available with:
- Speed sensor
- Alarm

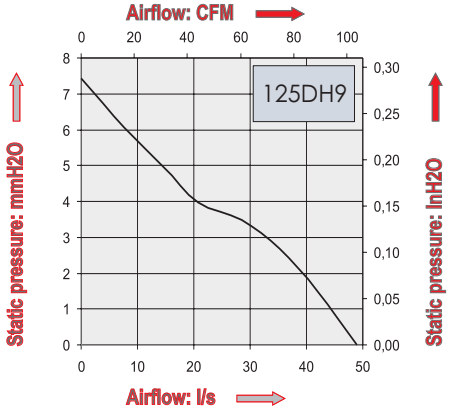

Part Number	Nominal voltage	Airflow	Noise level	Nominal speed	Input Power	Voltage range	Connection type		Operating temperature	
	V	l/s	dB(A)	RPM	W	V	Leads	Terminals	Min.°C	Max.°C
125DH9LP11241	110	49	42,5	3050	7,15	(82-146)	X		-25	70

Additional versions:
IP54: consult factory

Accessories:
Refer to Accessories leaflet

Non contractual document. Specifications are subject to change without prior notice. Pictures for information only. Edition 2008