P-tec Corp.
2405 Commerce Circle
Alamosa Co. 81101
www.p-tec.net

Tel:(800)688-0613
Tel:(719) 589 3122
Fax:(719) 589 3592
sales@p-tec.net

PL515 Series 5mm LED Right Angle Bi-Level Holder

Features

*Space Saving Bi-Level Circuit Board Indicator
*Housing Material Black Nylon UL94V-2
*High Light Output
*2 Hi-Eff Red LEDs with Color Diffused Lens used
*LEDs are arranged from Top to Bottom
*RoHS Compliant

Absolute Maximum Ratings at T_A = 25°C

Power Dissipation	78mW
Reverse Voltage (<100µA)	5.0V
Max Forward Current	30mA
Peak Forward Current (1/10 Duty Cycle, 0.1ms Pulse Width)	100mA
Operating Temperature Range	-25°C to + 85°C
Storage Temperature Range	-40°C to + 100°C
Soldering Temperature (1.6 mm below body)	260°C for 5 seconds

Electrical & Optical Characteristics at T_A = 25°C

Part Number	Emitting Color	Chip Material	Peak Wave Length	Dominant Wave Length	Viewing Angle 2θ ½	Forward Voltage @20mA (V)		Luminous Intensity @20mA (mcd)	
Color Diffused Lens			nm	nm	Deg	Typ	Max	Min	Typ
PL515-2R12	Hi-Eff Red	GaAsP	635	625	30°	2.1	2.6	19.0	39.0
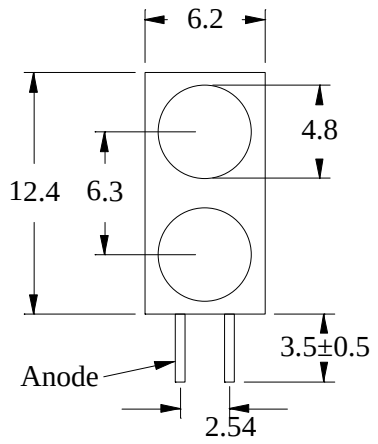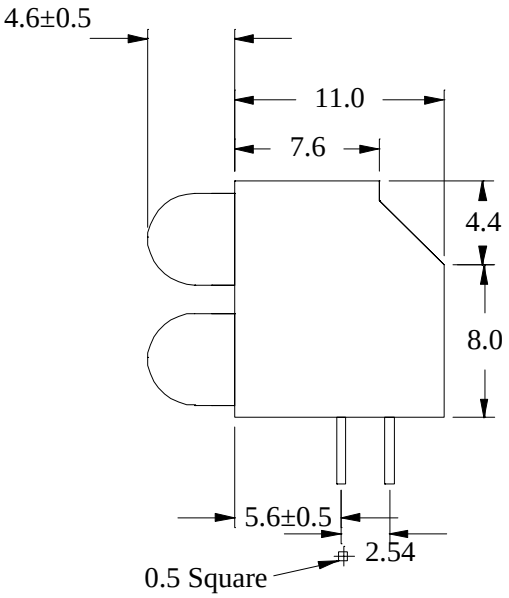
Package Dimensions are in **Millimeters**. Tolerance is ± 0.25mm unless otherwise specified.