Quad Common Mode Chokes

EPA3341S

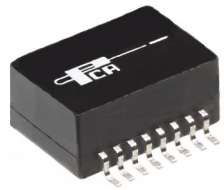

- For EMI Reduction
- Complies with or exceeds IEEE Requirements

Electrical Parameters @ 25° C

OCL (µH Min.)	Interwinding Capacitance (pF Max.)	Leakage Inductance (µH Max.)	Hipot (Vrms)	DCR (Ω Max.)	CMRR (dB Min.)					
@ 100 KHz, 0.1 Vrms	@ 100 KHz, 0.1 Vrms	@ 100 KHz, 0.1 Vrms	---	---	@ 0.3 MHz	@ 10 MHz	@ 50 MHz	@ 100 MHz	@200 MHz	@300 MHz
95	25	0.25	500	0.65	7	28	30	25	18	10

Schematic

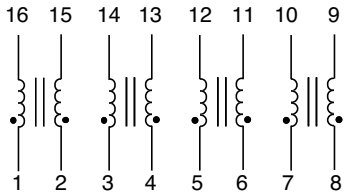

Package

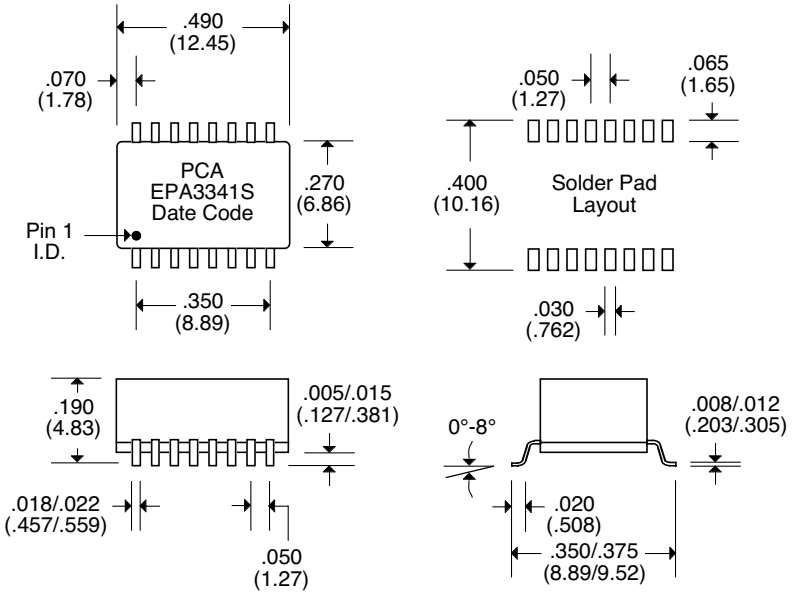

Unless Otherwise Specified Dimensions are in Inches /mm ± .010 /.25

PCA ELECTRONICS, INC.
16799 SCHOENBORN ST.
NORTH HILLS, CA 91343

Product performance is limited to specified parameters. Data is subject to change without prior notice.

CSA3341S Rev. 3 8/26/02

TEL: (818) 892-0761
FAX: (818) 894-5791
http://www.pca.com