Bothhand USA. **e-mail: sales@bothhandusa.com http://www.bothhand.com**

1000 BASE –T MAGNETICS MODULES

P/N: GSN5009 DATA SHEET

Feature

- Designed for long haul gigabit Ethernet 1000 BASE-T, full duplex applications.
- Supports 4 pairs of category 5 UTP cable.
- Cable interface for isolation and low common mode emissions.
- Compliant with IEEE 802.3ab standard for 1000 BASE-T.
- Operating temperature range: 0°C to +70°C.
- Storage temperature range: -25°C to +125°C.

Electrical Specifications @ 25°C

Part Number	Turns Ratio (±5%)		HI-POT (Vrms)
	TX	RX	
GSN5009	1CT:1CT	1CT:1CT	1500

Continue

Part Number	Insertion Loss (dB Max)	Return Loss (dB Min @ 100 Ω)					Cross talk Attenuation (dB Min)			DCMR (dB Min)		
	1–100MHz	1-30MHz	40MHz	50MHz	60-80MHz	100MHz	30MHz	60MHz	100MHz	30MHz	60MHz	100MHz
GSN5009	-1.0	-18	-14.4	-13.1	-12	-10	-45	-40	-35	-43	-37	-33

Schematic

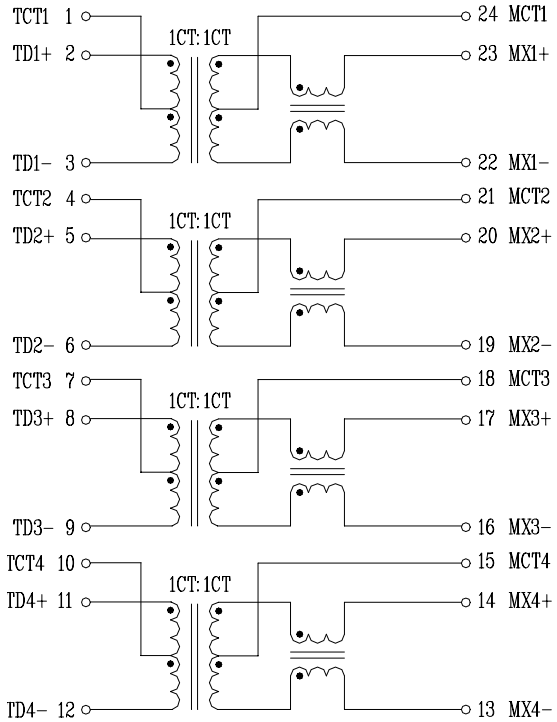

Mechanical

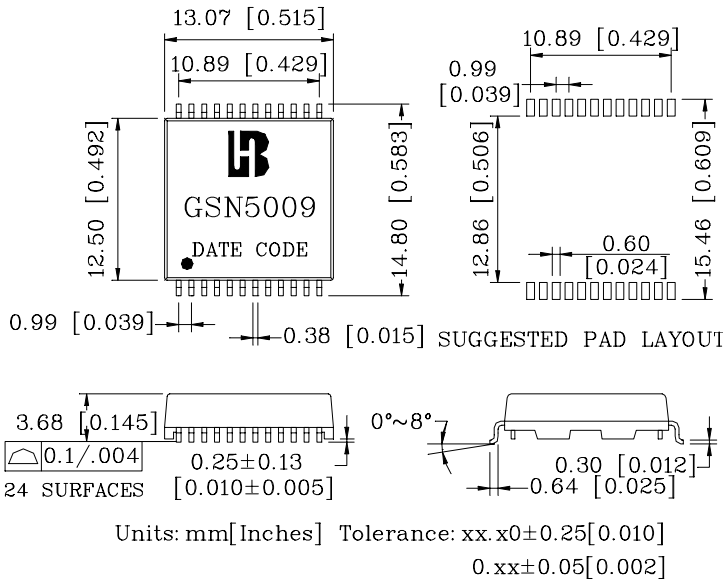

462 Boston St - Topsfield, MA 01983 - Phone: 978-887-8050 - Fax: 978-887-5434