LUCKY LIGHT

KW1-361 SERIES

LED Numeric Display
Single Digit (0.36")

DESCRIPTION:

The KW1-361 series is 0.36 inch (9.10mm) height single digit display with right DP designed for viewing distances of up to three meters.
This series is suitable for use in instruments, point of sales terminals and electrical appliances.
All devices are available as either common anode or common cathode.

PACKAGE DIMENSIONS

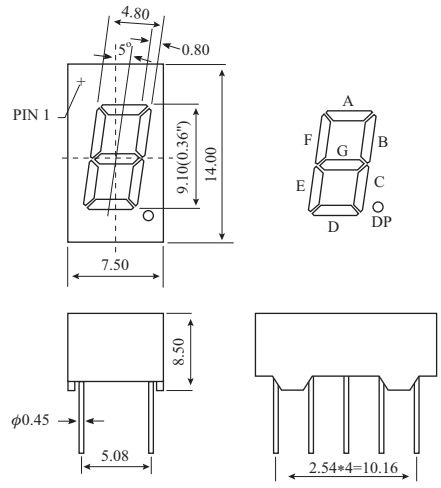

INTERNAL CIRCUIT DIAGRAM

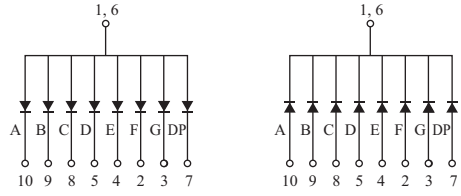

ABSOLUTE MAXIMUM RATINGS: (Ta=25°C)

Parameter	Max
Reverse Voltage per segment	5 V
Reverse Current per segment (Vr = 5V)	100μA
Derating Linear from 25°C per segment	0.4mA/ °C
Operating Temperature Range	-40°C To 85°C
Storage Temperature Range	-40°C To 100°C
Soldering Temperature 1.6mm(1/16") from body for 5 sec. at 260°C	

NOTES : 1. All dimensions are in millimeters (inches).
2. Tolerance is ±0.25mm(0.010) unless otherwise specified.
3. Specifications are subject to change without notice.
4. NP: No Pin.
5. NC: No Connect.

TESTING CONDITION FOR EACH PARAMETER :

Parameter	Symbol	Unit	Test Condition
Forward Voltage	Vf	V	If=20mA
Peak Emission Wave Length	λρ	nm	If=20mA
Spectral Line Half-Width	Δλ	nm	If=20mA
Reverse Current	Ir	μA	Vr=5V
Average Luminous Intensity	Iv	μ cd	If=10mA

PART NO. SELECTION AND APPLICATION INFORMATION (RATINGS AT 25°C AMBIENT)

Part No.	Chip		C.C or C.A	Wave Length λρ (nm)	Absolute Maximum Ratings				Electro-optical Data(at 10mA)					
	Raw Material	Emitted Color			Δλ (nm)	Pd (mW)	If (mA)	If (Peak) (mA)	Vf (V) Per Segment			If (Rec) mA	Iv (μcd) Per Segment	
									Min.	Typ.	Max.		Min.	Typ.
KW1-361A3	GaAsP/GaP	Hi-Eff. Red	Common Anode	635	45	100	50	100	1.7	1.9	2.6	10-20	700	1800
KW1-361AS	GaAlAs	Super Red		660	20	100	50	100	1.5	1.9	2.6	10-20	1500	5000
KW1-361A2	GaP	Green		565	30	100	50	100	1.7	2.2	2.6	10-20	700	1600
KW1-361AG	GaP	Super Green		570	30	100	50	100	1.7	2.2	2.6	10-20	850	1900
KW1-361A6	GaAsP/GaP	Yellow		585	30	100	50	100	1.7	1.9	2.6	10-20	600	1500
KW1-361C3	GaAsP/GaP	Hi-Eff Red	Common Cathode	635	45	100	50	100	1.7	1.9	2.6	10-20	700	1800
KW1-361CS	GaAlAs	Super Red		660	20	100	50	100	1.5	1.9	2.6	10-20	1500	5000
KW1-361C2	GaP	Green		565	30	100	50	100	1.7	2.2	2.6	10-20	700	1600
KW1-361CG	GaP	Super Green		570	30	100	50	100	1.7	2.2	2.6	10-20	850	1900
KW1-361C6	GaAsP/GaP	Yellow		585	30	100	50	100	1.7	1.9	2.6	10-20	600	1500

REMARKS : 1. The average luminous intensity is obtained by summing the luminous intensity of each segment and dividing by the total number of segments.
2. Luminous intensity is measured with a light sensor and filter combination that approximates the CIE (International Commission on Illumination) eye-response curve.
3. Clean only by pure water, isopropanol, ethanol, Freon TF (or equivalent).