MICRO ELECTRONICS

ULTRA HIGH BRIGHTNESS RED LED LAMP

DESCRIPTION

MS51TA is an ultra high brightness output red GaAlAs LED lamp encapsulated in a 5mm diameter clear transparent lens with an optimum viewing angle. 6 brightness grouping is provided for customer' selection.

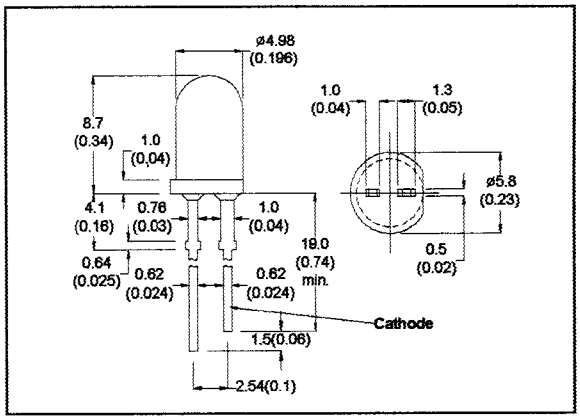

- All Dimension in mm (inch)
- No Scale
- Tol : +/- 0.3mm

ABSOLUTE MAXIMUM RATINGS

Power Dissipation @ Ta=25℃	100mW
Forward Current, DC (IF)	40mA
Reverse Voltage	5V
Operating & Storage Temperature Range	-50 to +100℃
Lead Temperature	260℃

ELECTRO-OPTICAL CHARACTERISTICS (Ta=25℃)

PARAMETER	SYMBOL	MIN	TYP	MAX	UNIT	CONDITIONS
Forward Voltage	VF		1.8	2.4	V	IF=20mA
Reverse Breakdown Voltage	BVR	5			V	IR=100 μA
Luminous Intensity	IV				mcd	IF=20mA
MS51TA-0		30	45		mcd	IF=20mA
MS51TA & MS51TA-1		50	75		mcd	IF=20mA
MS51TA-2		80	120		mcd	IF=20mA
MS51TA-3		120	180		mcd	IF=20mA
MS51TA-4		160	240		mcd	IF=20mA
MS51TA-5		240	400		mcd	IF=20mA
Peak Wavelength	$\lambda\rho$		660		nm	IF=20mA
Spectral Line Half Width	$\Delta\lambda$		20		nm	IF=20mA
Viewing Angle	$2\theta 1/2$		40		degree	IF=20mA

Rev.A.

MICRO ELECTRONICS LTD.
38, Hung To Road, Microtron Bulding, Kwun Tong, Kowloon, Hong Kong.
Kwun Tong P.O. Box 69477 Hong Kong. Fax No. 2341 0321 Telex:43510 Micro Hx. Tel: 2343 0181-5

Sep-99