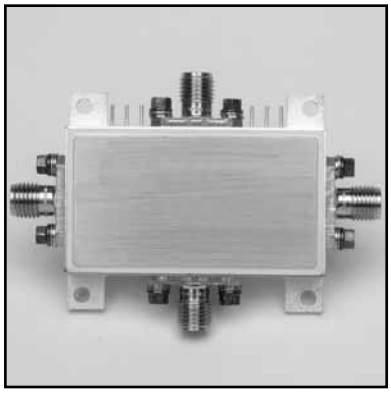

MODEL NUMBER
DSW36200

GaAs SP3T

FEATURES

- .1 - 2000 MHz
- High Power Limiting

SP3T

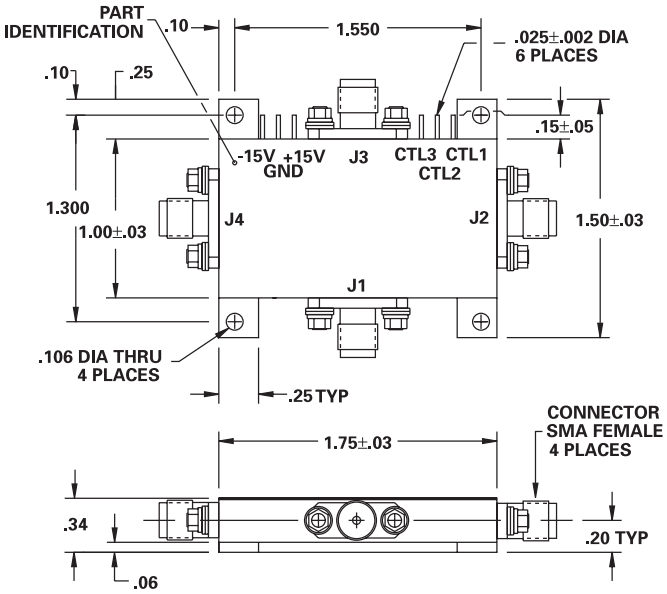

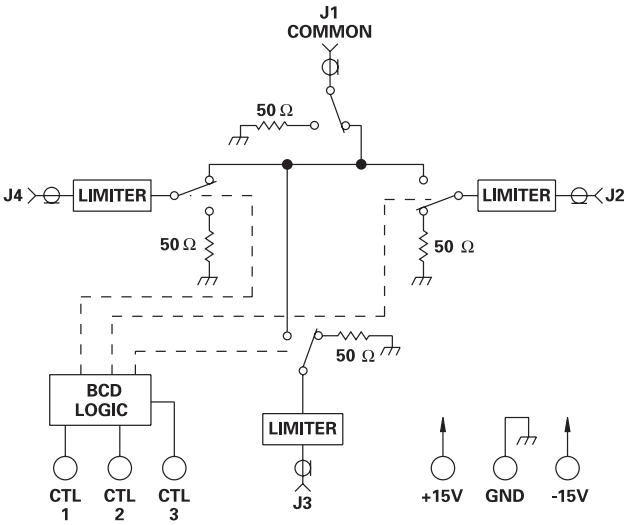

TYPICAL PERFORMANCE

at 25°C

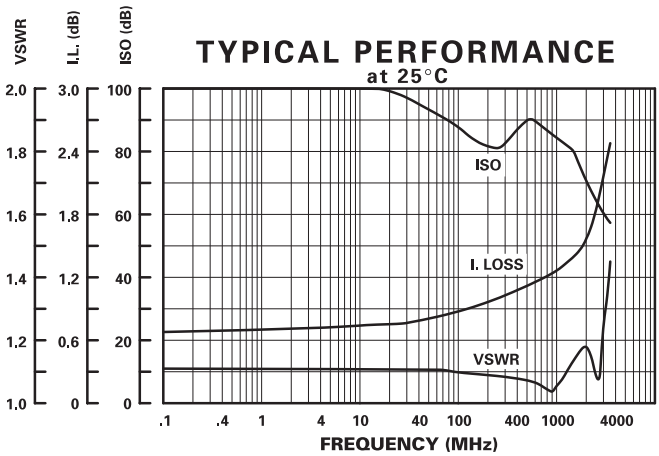

LOGIC TABLE

CTL 3	CTL 2	CTL 1	J1 COMMON TO
0	0	0	ALL OFF
1	0	1	J2
1	1	0	J3
1	1	1	J4

GUARANTEED PERFORMANCE

Parameter		Min	Typ	Max	Units	Conditions
Operating Frequency		0.1		2000	MHz	
DC Current			11	25	mA	At +15 VDC Supply
			10	20	mA	At -15 VDC Supply
Control Type			TTL			See Logic Table
Control Current	*High*		±10	±100	µA	VIH = +2.7V
	Low		±10	±100	µA	VIL = +0.5V
Isolation		60	70		dB	
Insertion Loss			2	3	dB	
VSWR	*Thru*		1.3/1	1.5/1		
	Termination		1.3/1			
Impedance			50		OHMS	
Switching Speed			.07	5	µSEC	50% TTL to 90% / 10% RF
Transition (Rise/Fall) Time			16		nSEC	10% / 90% or 90% / 10% RF
Switching (Video) Transients			37		mV	Peak Value
Intercept Points	*2nd*		+65		dBm	70 MHz / 50 MHz
	3rd		+34		dBm	35 MHz / 50 MHz
RF Power	*Operate*		11	-10	dBm	Min 1 dB Compression
	No Damage			+30	dBm	CW
	1 µSEC Pulse Width			+30	dBm	< 1 MHz
	(0.1% Duty Cycle At J2, J3 And			+40	dBm	10 MHz
	J4 Only)			+50	dBm	100 MHz - 18GHz
Operating Temperature		-55	+25	+125	°C	TA